MiTek®

SERVICE BULLETIN

Document ID:

SB280

Title:

Servo Motor Gearbox Mounting Bolt Replacement

Affected machinery: *Hornet II*™ saws

Distribution: Customers upon order

Applies to: All *Hornet II*™ saws (*Hornet II*™ saws only - does not apply to first generation *Hornet*™ saws)

MiTek Automation
Phone: 800-523-3380
Fax: 636-328-9218
www.mitek-us.com

Part # and Rev.	SB280
Print Date	9 December 2024
Revision Date	
Revised By	
Orig. Release Date	2 December 2024
Created By	A. Moll
Approved By	A. McIntire

CAUTION: The document should only be printed in color with adequate resolution.
Graphics may be unclear and could create an unsafe condition if this recommendation is not followed.

Purpose and Scope

This service bulletin instructs how to replace the infeed pusher and turntable servo motor gearbox mounting bolts on the Hornet II saw.

Overview

Parts Included

The parts included in this kit are shown in Table 1. Please make sure all parts and supplies are present before starting the procedure.

Table 1: Parts in SB280KIT

Quantity	Description	Part #
12	Bolts, 25mm	302083
1	Service bulletin document	SB280

If you have any questions, call MiTek Automation Support at 1-800-523-3380.

Supplies Needed

- Front saw chamber door key (PN 520195)
- Torque wrench, 3/8" drive, with capacity up to 11 ft-lbs(132 in-lbs)
- Socket wrench, 3/8" drive
- 3/4" socket compatible with wrench
- 4mm bit compatible with torque wrench
- LOCTITE® 242® thread adhesive
- 3/32" hex key
- 1/8" hex key
- 5/32" hex key
- 3/16" bit compatible with wrench
- 7/32" bit compatible with wrench
- 3/8" bit compatible with wrench
- 1/2" bit compatible with wrench
- 9/16" bit compatible with wrench

Lockout/Tagout Procedure

Electrical Lockout/Tagout

	⚠ WARNING
	ELECTROCUTION HAZARD. **All electrical work must be performed by a qualified electrician.** **Verify that all power to the machine has been turned off and follow approved lockout/tagout safety procedures before performing any maintenance.** **If it is absolutely necessary to troubleshoot an energized machine, follow NFPA 70E for proper procedures and person protective equipment.** **When the disconnect switch is off, there is still live power within the disconnect switch's enclosure. Always turn off the power at the building's power source to the equipment before opening this electrical enclosure.**

Before performing maintenance on any machine with electrical power, lockout/tagout the machine properly. When working on a machine outside of the machine's main electrical enclosure, not including work on the electrical transmission line to the machine, follow your company's approved lockout/tagout procedures which should include, but are not limited to the steps include in this service bulletin.

Figure 1: Hornet II Disconnect Switch Lockout/Tagout Procedure

Pneumatic or Hydraulic System Lockout/Tagout

	⚠ WARNING
	**HIGH PRESSURE HAZARD.** **Bleed pneumatic lines before performing any maintenance on the system.** **Working on pressurized lines may cause injury.**

After lockout/tagout of the electrical power, turn off or close the system's air shut-off valve and attach a lock and tag.

Figure 2: Sample of a Lockout/Tagout on a Pneumatic System

Procedure

Removing the Infeed Pusher Guards

	⚠ WARNING
	**MOVING PARTS CAN CRUSH AND CUT.** **Always verify that power to the machine has been turned off and follow approved lockout/tagout procedures.**

1. After ensuring power is locked out, remove the following guards from the infeed pusher by loosening and removing the bolts. See Figure 3.
   1) Top guard
   2) Front Guard
   3) Belt Guards - Remove any guards preventing access to:
   - Top of the infeed pusher
   - Center of the infeed belt when the infeed pusher is in the home position
   - Consider positioning the infeed pusher for easier access before powering off the saw.

Figure 3: Infeed Pusher Guard Removal

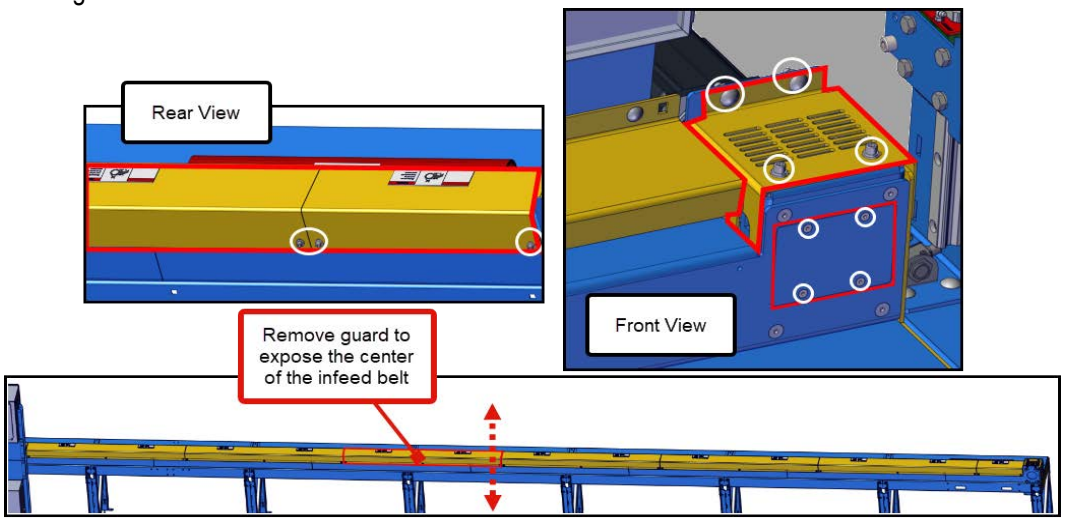

Removing the Pulley

2. Using a marker, mark the current position of the slide-side belt securing plate (Figure 5) so it can be used as a reference when re-installing the plate.

3. Loosen and remove the 4 bolts from the belt securing plate in Figure 5 on the slide side of the infeed pusher. Remove the top cover, exposing the belt.

4. Loosen the belt by inserting a screwdriver (or another leverage device) into the tensioner on the pusher. Leverage the tool up or down to rotate the tensioner. See Figure 4.

Figure 4: Belt Removal

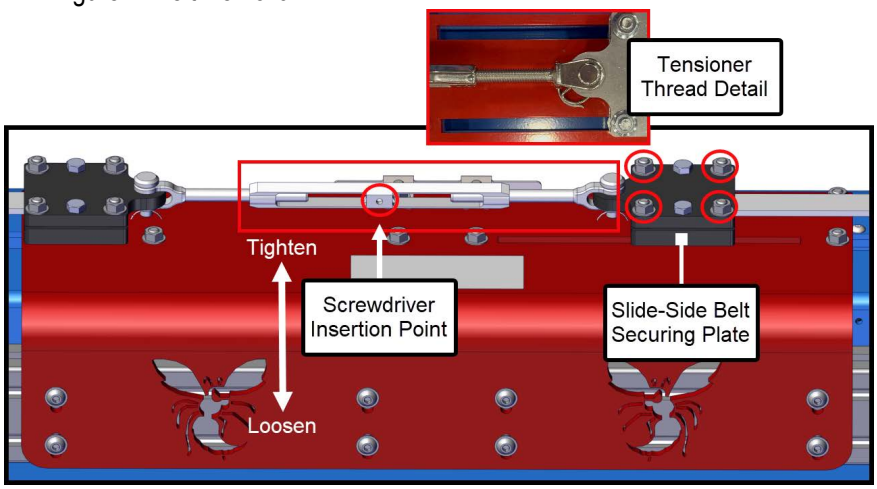

5. At the pulley at the end of the infeed pusher, slide the belt to one side until the pulley is exposed. See Figure 5.

Figure 5: Pulley Removal

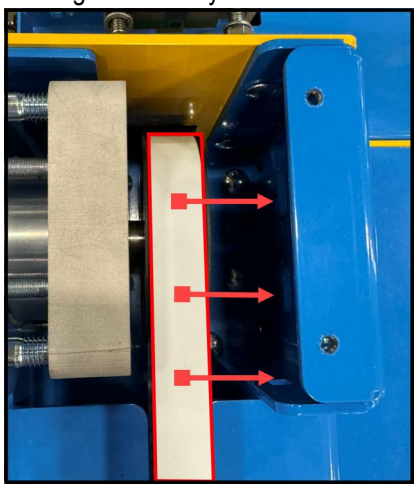

6. Loosen and remove the 2 bolts securing the pulley as seen in Figure 6 , then remove the pulley from the shaft.

Figure 6: Pulley Bolts

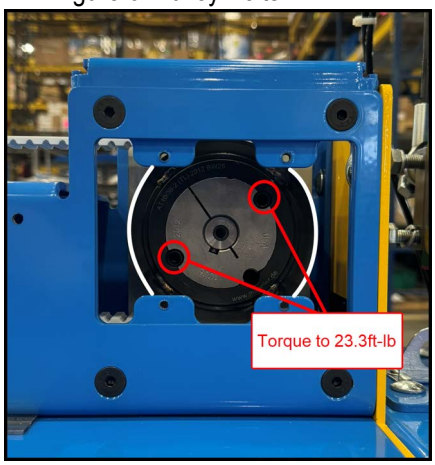

Replacing the Infeed Pusher Motor Gearbox Mounting Bolts

7. Loosen and remove the 4 bolts from the gearbox mounting shown in Figure 8 using the appropriate hex key listed in *Supplies Needed*. Discard the bolts.
   a) Note that the servo motor, gearbox, and gearbox mounting need to be supported before loosening and removing the bolts, as they will become loose once the bolts are removed.

	⚠ WARNING
	Use ONLY the bolts described in Table 1. **Use the NEW bolts provided in this kit.** **Use the thread adhesive described in Table 1.** **TORQUE to specifications given in Figure 8!** **Ensure the bolts are fully embedded and flush against the gearbox mount surface.**

A torque wrench should be calibrated on a yearly basis to ensure accuracy.

8. Using new bolts supplied in this kit, install all 4 bolts.
   - Use the torque wrench and bolts listed in *Supplies Needed*.
   - Use the thread adhesive listed in *Supplies Needed*.
   - Hand tighten all 4 bolts before using the torque wrench.
   - Using a torque wrench, tighten the bolts until they all reach the recommended torque of 8.5ft-lb.
   - Once properly torqued, all bolts should sit flush with the surface of the gearbox mounting.
   - If any of the tapped holes shown in Figure 8 are compromised, the assembly can be rotated and alternative tapped holes highlighted in Figure 7 can be used instead.

Figure 7: Tapped Holes

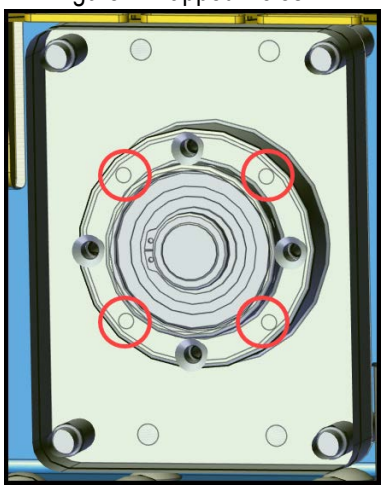

Figure 8: Gearbox Mounting Bolt Replacement (Infeed Pusher)

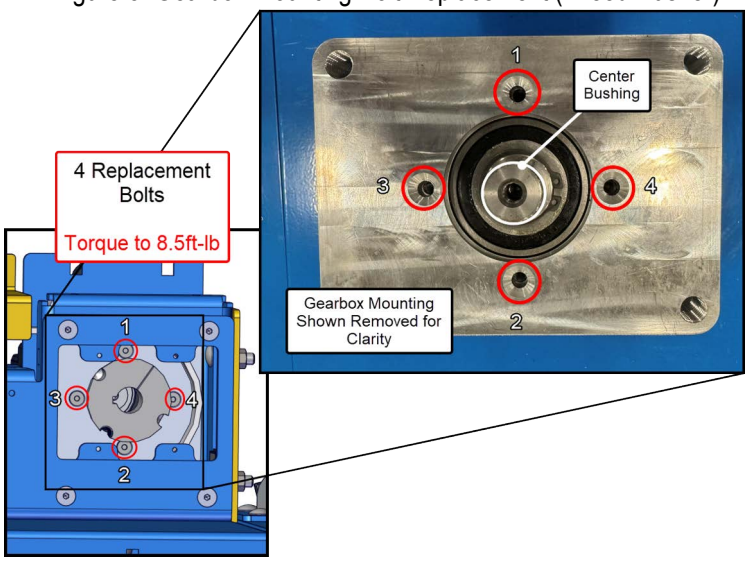

9. Place the pulley back onto the center bushing, removed in Step 6, and hand-tighten the fixing bolts. The pulley should still allow for free movement of the belt but not become unattached.

10. Place the infeed pusher belt around the pulley. Ensure the belt is aligned with the middle of the pulley and the infeed channel that runs the length of the infeed. See Figure 10.

11. Place the belt back onto the belt securing plate on the infeed pusher. Ensure the belt is aligned with the center infeed channel as seen in Figure 10 before installing the plate. Re-install the plate using the 4 bolts that were removed in Step 2.

    a) Tension the infeed pusher belt using the belt tensioner on the top of the infeed pusher. See Figure 4.

    b) The belt is at the appropriate tension when there is a 1" space between the top of the infeed channel and the bottom of the belt when the infeed pusher is in the home position (Figure 9).

Figure 9: Infeed Pusher Belt Tension

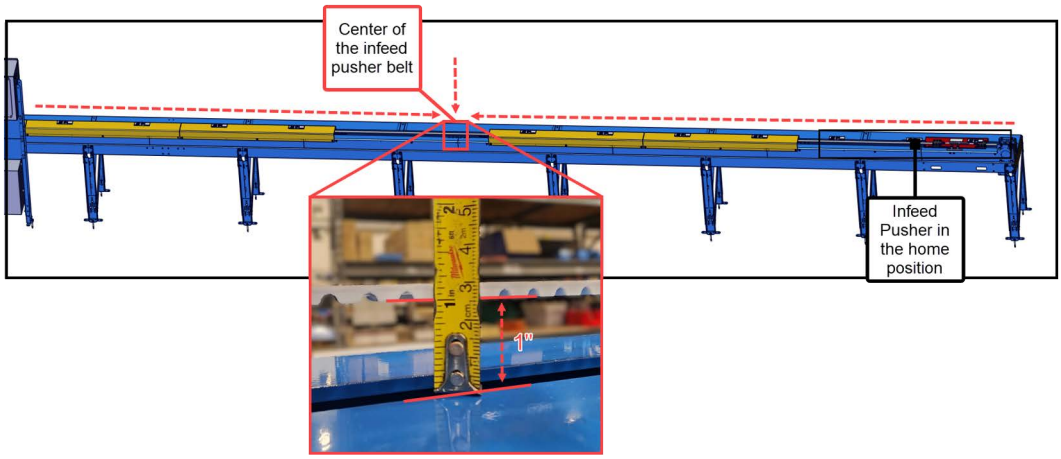

Figure 10: Infeed Pusher Belt Alignment

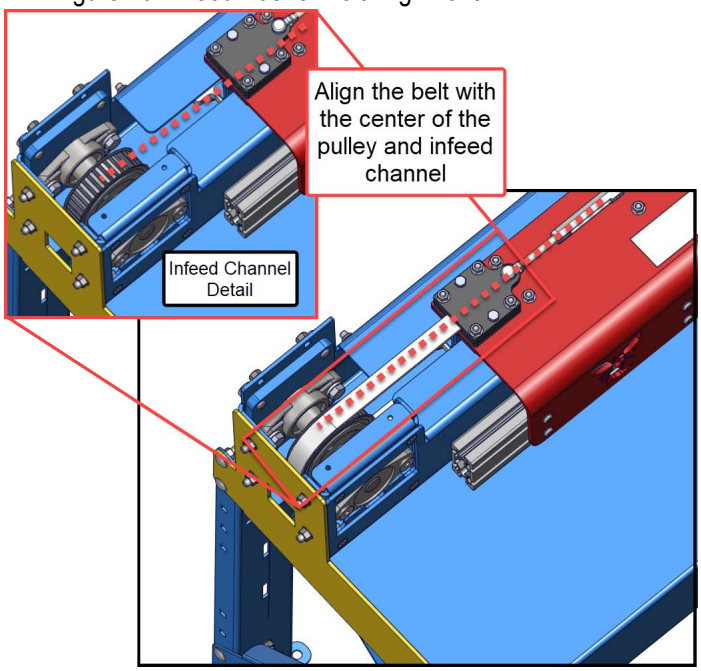

12. Once the pulley, bushing, and belt are assembled and aligned with the center infeed channel, manually traverse the infeed pusher back and forth the whole length of the infeed at least 7 times (Figure 11).
    - Traverse from the home position to inside the chamber.
    - Manual traversal allows the pulley, bushing, and belt to self-align.

Figure 11: Pulley, Bushing, and Belt Self-Alignment

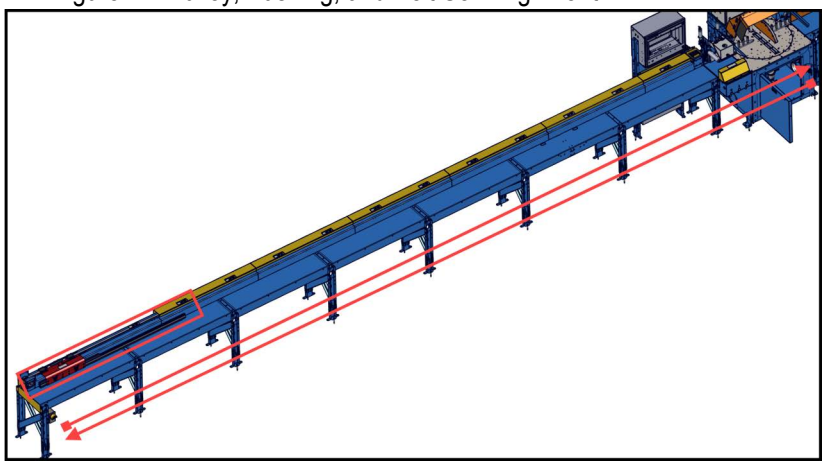

13. Check that pulley is aligned properly with the belt and the center channel, then torque the fixing bolts to the specifications seen in Figure 6.
14. Replace all guards that were removed in Step 1.

Removing the Turntable Servo Motor Assembly

1. After ensuring power is locked out, open the front saw chamber door using the key.
2. Loosen the 4 bolts shown in Figure 12 so the assembly can be shifted towards the center of the saw chamber to allow for enough play in the turntable belt to remove it from the pulley and facilitate removal of the assembly.
3. Once there is enough play in the belt to loosen it from the pulley, remove the 4 bolts highlighted in Figure 12, which will free the assembly.
   a) Be sure to support the assembly before removing the bolts as the assembly will no longer be attached upon bolt removal.

Figure 12: Removing the Turntable Servo Motor Assembly

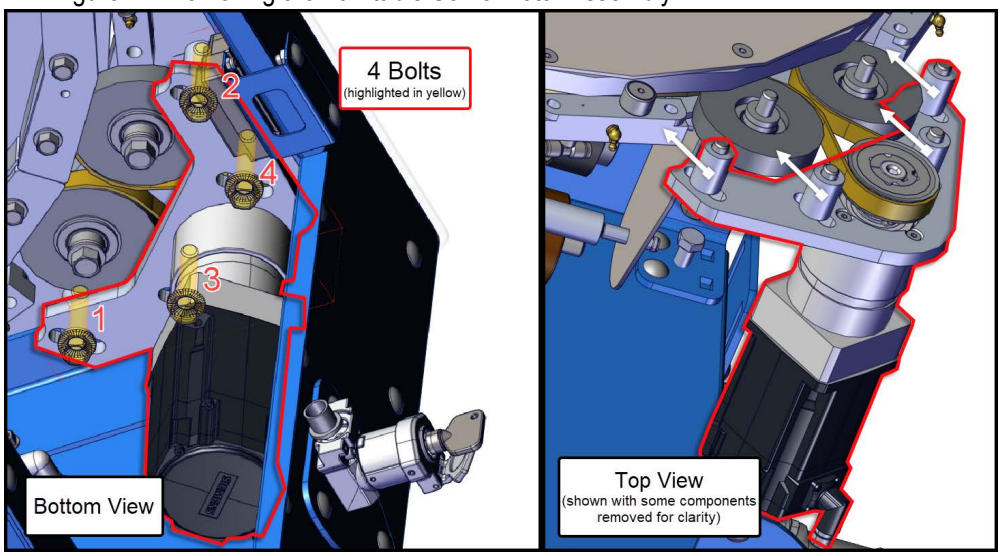

4. Loosen and remove the bolts shown in Figure 13, then remove the pulley to facilitate easier access to the gearbox mounting bolts.

Figure 13: Turntable Pulley Bolt

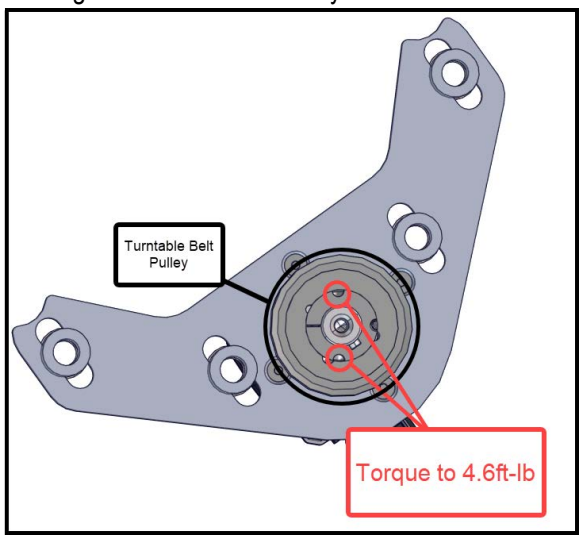

5. Loosen and remove the 4 bolts from the gearbox mounting shown in Figure 14 using the appropriate hex key listed in Supples Needed. Discard the bolts.

	⚠ WARNING
	Use ONLY the bolts described in Table 1. **Use the NEW bolts provided in this kit.** **Use the thread adhesive described in Table 1.** **TORQUE to specifications given in Figure 14!** **Ensure the bolts are fully embedded and flush against the gearbox mount surface.**

A torque wrench should be calibrated on a yearly basis to ensure accuracy.

6. Using new bolts supplied in this kit, install all 4 bolts.
   - Use the torque wrench and bolts listed in *Supplies Needed*.
   - Use the thread adhesive listed in *Supplies Needed*.
   - Hand tighten all 4 bolts before using the torque wrench.
   - Using a torque wrench, tighten the bolts until they all reach the recommended torque of 8.5ft-lb.

Figure 14: Gearbox Mounting Bolt Replacement (Turntable)

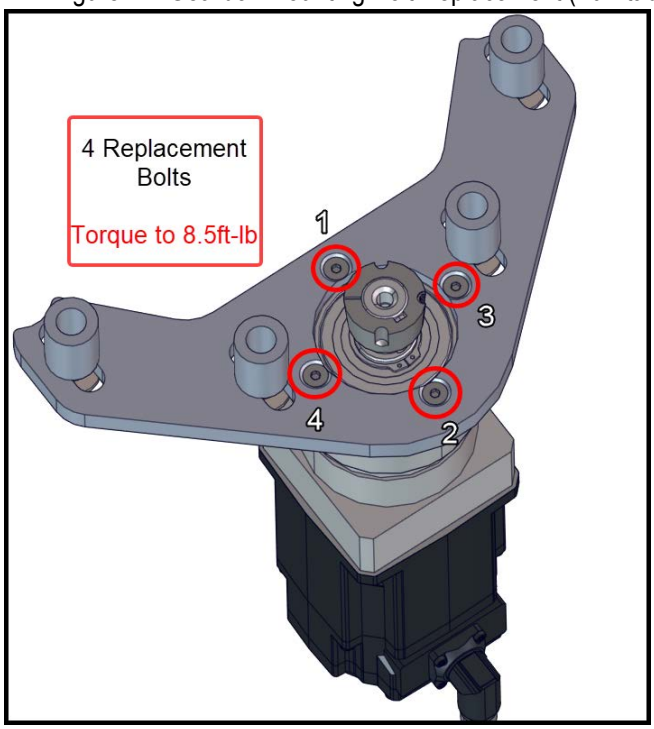

7. Once properly torqued, all bolts should sit flush with the surface of the gearbox mounting.
8. Reinstall the turntable belt pulley with the 2 bolts removed in Step 15. Torque the bolts to the specifications shown in Figure 13.
9. Reinstall the turntable servo motor assembly as shown in Figure 12.
   a) Use the bolts that were removed in Step 15.
   b) Place the turntable belt around the pulley.
   c) Hand tighten bolt #1 in Figure 12 to use as a pivot to maneuver the assembly for tensioning the belt.
   d) Position the assembly so that turntable belt has similar tension around all pulleys as before the assembly was removed.
   e) Position a tool in the hole and leverage against the assembly to aide in belt tensioning (highlighted in Figure 15).
   f) Once the belt is at the appropriate tension, tighten the bolts in the order shown in Figure 12.

Figure 15: Turntable Belt Leverage

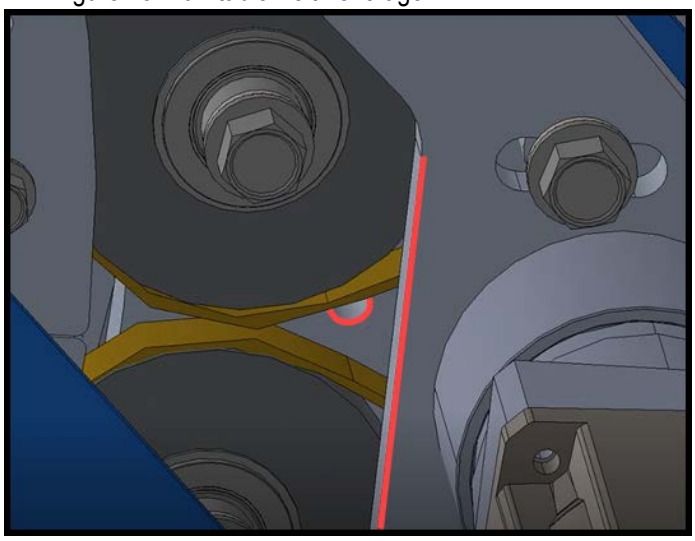

10. Close and lock the front saw chamber door.
11. Power on the machine:
    a) Remove lockout/tagout and switch the disconnect switch to the ON position. See Figure 1.
    b) Release the E-stop and clear any alarms.
    c) Use the “Reset” button to resume operation.
12. Perform a full calibration. See the Hornet II manual for more information.

END OF SERVICE BULLETIN