CDS™

Component Delivery System

Copyright © 2026 MiTek ©. All rights reserved.

Patent pending.

Manual applies to United States equipment.

001060MANUAL
rev. D

CAUTION: **MiTek recommends printing this manual in high resolution using color ink. Many of the graphics may be unclear and may create an unsafe condition if this recommendation is not followed.**

CDS™

MiTek Machinery Division
301 Fountain Lakes Industrial Drive
St. Charles, MO 63301
Phone: 800-523-3380
Fax: 636-328-9218
www.mitek-us.com

Part # and Rev.	001060MANUAL rev. D
Date Printed	September 24, 2026
Date Created	19 December 2017
Created By	G. Gaia
Approved By	R. Tucker
Date Revised	24 September 2026
Revised By	A. McIntire

Legal Notice

Patents

MiTek has patents pending for the *CDS* (*Component Delivery System*).

Return Goods Policy

Return goods cannot be accepted without prior authorization and are subject to a restocking charge. The Seller certifies the articles specified herein were produced in compliance with all provisions of the Fair Labor Standards Act of 1938, as amended, including Section 12.—Rev. 6/98.

Corrections and Improvements

To report errors or recommend improvements to this manual, please complete the Document Evaluation Form in the appendices. Mail or fax the form to:

MiTek Machinery Division
301 Fountain Lakes Industrial Drive
St. Charles, MO 63301
Attn: Engineering Manager
Fax: 636-328-9218

Notice of Change

Component Delivery System

Use this page to record service bulletins and notices that you receive to keep your manual updated.

Number	Date	Title

Table of Contents

Safety (English) **vii**
- **Safety Indicator Signal Words** . . . . . **vii**
- **General Equipment Safety Rules** . . . . . **viii**
- **Lockout/Tagout** . . . . . **xi**
  - Lockout/Tagout Guidelines xi
  - Electrical Lockout/Tagout Procedures xiii
  - Pneumatic Lockout/Tagout Procedure xv
- **Troubleshooting with an Energized Machine** . . . . . **xv**
- **Safety Tests** . . . . . **xvi**
  - Inspecting the CDS xvi
  - Checking the Function of the E-Stop Pushbuttons xvii
- **Restricted Zone** . . . . . **xviii**
  - Marking the Restricted Zone xviii
- **Safety Symbol Definitions** . . . . . **xix**
- **Declaration of Safety Conformity** . . . . . **xxvi**
- **Indicadores de seguridad: Palabras de aviso** . . . . . **xxvii**

Seguridad (Español) **xxvii**
- **Reglas de seguridad para el equipo de general** . . . . . **xxviii**
- **Bloqueo/Etiquetado** . . . . . **xxxi**
  - Pautas de bloqueo/etiquetado xxxi
  - Procedimientos de bloqueo/etiquetado eléctricos xxxiii
  - Procedimiento de bloqueo o etiquetado del sistema neumático xxxv
- **Solución de problemas con una máquina energizada** . . . . . **xxxv**
- **Pruebas de seguridad** . . . . . **xxxvi**
  - Inspección del CDS xxxvi
  - Verificación de la función de los pulsadores de paro de emergencia xxxvii
- **Zona Restringida** . . . . . **xxxviii**
- **Marcación de la zona restringida** . . . . . **xxxix**
- **Información adicional** . . . . . **xxxix**

Introduction **1**
- **Introduction to the Manual** **1**
  - Purpose and Scope of the Manual 1
  - Understanding the Manual 1
- **Additional Resources** **3**
  - Website 3
  - Phone or E-mail Support 3

General Information **4**
- **Introduction to the Equipment** **4**
  - Purpose of the Equipment 4
  - Description of the Equipment 4
  - Safety Compliance of the Equipment 4
- **Component Descriptions** **5**
  - Transfer Conveyor 5
  - Push Conveyor 5

Staging Conveyor . . . 6
Bridge . . . 6
Gravity Conveyor . . . 7
Common Components . . . 7
Technical Specifications . . . 8

Installation 9
Installation Requirements . . . 9
Environmental Requirements . . . 9
Infrastructure Requirements . . . 10
Responsibilities During Installation . . . 11
Responsibilities Before Moving or Selling . . . 11
Marking Restricted Zone . . . 11
Marking Area on Your Own . . . 11
Installing MiTek Restricted Zone Tape . . . 11

Start Up 12

Operation 13
Before You Begin . . . 13
Safety Operating Notes . . . 13
Stopping the Machine . . . 14
Operating the CDS . . . 17
Operator Controls . . . 17
Staging Conveyor Sensors Description . . . 19
Resolving Stoppages . . . 20

Maintenance 21
Maintaining Your Machine . . . 22
Performing Maintenance Safely . . . 22
Important Safety Information . . . 23
Making Adjustments and Replacing Parts . . . 25
Testing the Safety of the Machine . . . 25
Mechanical System . . . 26
Bearings . . . 26
Gearmotors . . . 27
Chains and Belts . . . 29
Pneumatic System . . . 41
Pneumatic Assembly with Filter / Regulator . . . 41
Electrical System . . . 44
Electrical Enclosures . . . 44
VFDs (Variable Frequency Drives) . . . 44
PLC (Programmable Logic Controller) . . . 45
Light Grid Bars . . . 46
Gearmotors . . . 47
Sensors . . . 48
Overview of Sensors . . . 48
Cleaning Sensors . . . 48
Staging Conveyor Sensors . . . 48
Reverse Sensor . . . 49
Motion Sensor (earlier models) . . . 50

Parts List 54
Using the Parts List Appendix . . . 54
Safety Notes for Replacement Parts . . . 54
Part Numbers . . . 55

Label Part Numbers 57

Maintenance Checklist **58**

Using the Maintenance Checklists 58

Safety Notes for the Maintenance Checklists 58

Daily Checklist. 59

Weekly Checklist. 60

Monthly Checklist 61

Drawing Set **62**

Document Evaluation **63**

Document Evaluation Form 64

General Evaluation 64

Specific Evaluation 64

Glossary **65**

Index **68**

Safety (English)

Purpose of Chapter

This chapter explains general information and specific procedures for operating the machine safety.

Safety Indicator Signal Words

The following signal words and colors are used throughout this document to indicate safety hazards. Pay careful attention when you see them. The level of severity differs for each signal word and color.

Signal words are accompanied by graphics showing what personnel should or should not do. The graphics are called safety symbols and are defined on page xix, but more specific text is provided every time a graphic is used throughout the manual. Everyone near the machine must be trained on how to read these safety indicators.

Failure to comply with the instructions accompanying each signal word may result in property damage, personal injury, or even death. Personnel must follow all safety procedures and practices to ensure the safest possible operation of this equipment. However, at no time is this document a substitute for common sense. Personnel must ensure that the work environment is safe and free of distractions.

Refiérase a la página xxvii para español.

For safety information in Spanish, refer to page xxvii.

DANGER Indicates an imminently hazardous situation which, if not avoided, is likely to result in death or serious injury.
WARNING Indicates a potentially hazardous situation, which, if not avoided, may result in death or serious injury.
CAUTION Indicates a potentially hazardous situation which, if not avoided, may result in minor or moderate injury.
NOTICE Calls attention to information that is significant to understanding the operation at hand or the potential for property damage.
ENVIRONMENTAL Applies to conditions that may affect the environment but do not have an immediate, direct effect on personnel or equipment.

General Equipment Safety Rules

Because it is impossible to anticipate every circumstance that might involve a hazard, the safety information provided in this equipment manual and on the machine is not all-inclusive. If this machine is operated or serviced using a procedure not specifically recommended by the manufacturer, the procedure shall be approved by a professional engineer to ensure it will not render the equipment unsafe. Use extreme caution and common sense at all times.

Know Your Equipment

- Read this manual completely before using or maintaining the equipment. Do not operate this machine unless you have a thorough knowledge of the controls, safety devices, emergency stops, and operating procedures outlined in this manual.
- Read and follow all safety notes. Failure to comply with these instructions may result in economic loss, property damage, and/or personal injury, including death.
- Refer to the lockout/tagout guidelines on the following pages to perform maintenance and troubleshooting of this equipment safely.
- Observe and obey all safety labels. Replace worn labels immediately.
- Use this equipment solely for the purpose described in this manual.
- Only qualified personnel should attempt to operate or perform maintenance on this equipment. “Qualified personnel” is defined as:

  ...a person or persons who, by possession of a recognized degree or certificate of professional training, or who, by extensive knowledge, training, or experience, has successfully demonstrated the ability to solve problems relating to the subject matter and work (ANSI B30.2-1983)

  ...one who has skills and knowledge related to the construction and operation of the electrical equipment and installations and has received safety training on the hazards involved (NEC 2002 Handbook)

Personal Safety

- Always wear safety glasses and hearing protection in an industrial environment.
- Use a filtering face piece (dust mask) when working near sawdust.
- Wear proper clothing and appropriate personal protective equipment (e.g. safety glasses and hearing protection.) Do not wear loose clothing or jewelry. Confine long hair by tying it back.
- Use caution when lifting heavy parts or material.

Installing the Equipment

- Follow installation instructions completely.
- This equipment is not for use in a residential area.

Lockout/Tagout

- The blue lock and tag symbol in the margin indicates that proper lockout / tagout procedures must be used prior to starting the procedure where the symbol occurs.
- Before performing maintenance on the pneumatic system, bleed the lines to eliminate pressure.
- Lockout/tagout all energized systems before performing maintenance on them. Refer to lockout/tagout guidelines on page xiii through page xiv (electrical) and page xv (pneumatic).

Keeping a Safe Environment

- Keep children away. All visitors should be kept a safe distance from the work area. Hazards may not be apparent to individuals unfamiliar with the machine.
- Keep work areas well lit.
- Keep the work area clean and free of any trip or slip hazards.
- Do not use the equipment in damp or wet locations, or expose it to rain or snow.
- Minimize dust clouds and protect your equipment by cleaning dust in this manner:

	NOTICE
	Never use compressed air inside an electrical enclosure. It may force contaminants into electrical connections. **Use a vacuum to remove dust from electrical enclosures. Canned air is acceptable after vacuuming.**

a) Vacuum dust prior to blowing with air

b) Shut down electrical power and sources of ignition

c) If using compressed air, it should be a low compression (no more than 15 psi)

d) Powered cleaning equipment such as vacuums must be consistent with local governmental codes for use in dusty conditions.

Operating and Maintaining the Equipment

- Ensure that all people, tools, and foreign objects are clear of the restricted zones before operating this equipment. The restricted zones are shown on page xviii.
- Perform safety tests to ensure all E-stops are working properly before operating the equipment at the initial startup, after performing any maintenance, and in accordance with the maintenance schedule.
- In case of machine malfunction, stop the machine immediately using an E-stop and report the malfunction to a supervisor.
- Check for worn or damaged parts regularly. Repair or replace them immediately.
- Keep the pneumatic and electrical systems in good working order at all times. Repair leaks and loose connections immediately. Never exceed the recommended pressure or electrical power.
- Check that all safety devices are in working order before each shift starts. All protective guards and safety devices must be in place before and during use of the machine. Never disconnect or bypass any safety device or electrical interlock.
- Only qualified maintenance personnel shall remove or install safety devices.
- Periodically inspect the quality of the finished product.

Electrical Safety

- Do not use any liquids in the interior of electrical cabinets.
- When using solvents on and around the machine, remove power to the machine to eliminate the chance of sparking, resulting in explosion or fire. Wear a respirator approved for use with solvents. Wear protective clothing, gloves, and safety glasses.

Lockout/Tagout

Lockout/Tagout Guidelines

Figure SAFETY-1: An Example of a Lockout/Tagout Device

All lockout/tagout guidelines must be met according to OSHA 29 CFR 1910.147. A specific procedure should be included in your company's energy control program. This manual is not intended to replace your company's de-energizing or lockout/tagout procedure required by OSHA, but merely to provide general guidance.

The term "lockout," as used in this manual, means placing a lockout device on any and all energy sources to ensure that the energy isolating device and the equipment being controlled cannot be re-energized or operated until the lockout device is removed.

- Energy sources include electrical, mechanical, hydraulic, pneumatic, chemical, thermal, or other energy.
- In the case of electrical energy sources, the main power and control power to the machinery must be turned off and physically locked in the Off position.

	NOTICE
	The main electrical enclosure supplies power to the conveyor electrical enclosures. **Even when the disconnect switch on a conveyor electrical enclosure is turned to the Off position, the other conveyors still have power.** **See page xii for the locations of disconnect switches on a sample *CDS*.**

- A lockout device is usually a keyed padlock.

If more than one person is working in a restricted zone, use a group lockout device that will allow each person to use a lock that can be removed only by the person performing the maintenance.

"Tagout" means that a prominent warning is securely fastened to an energy-isolating device to indicate that the equipment shall not be operated.

Whenever you see the blue lock symbol shown in the margin, lockout/tagout!

Figure SAFETY-2: Disconnect Switch and E-Stop Pushbutton Locations on Sample *CDS*

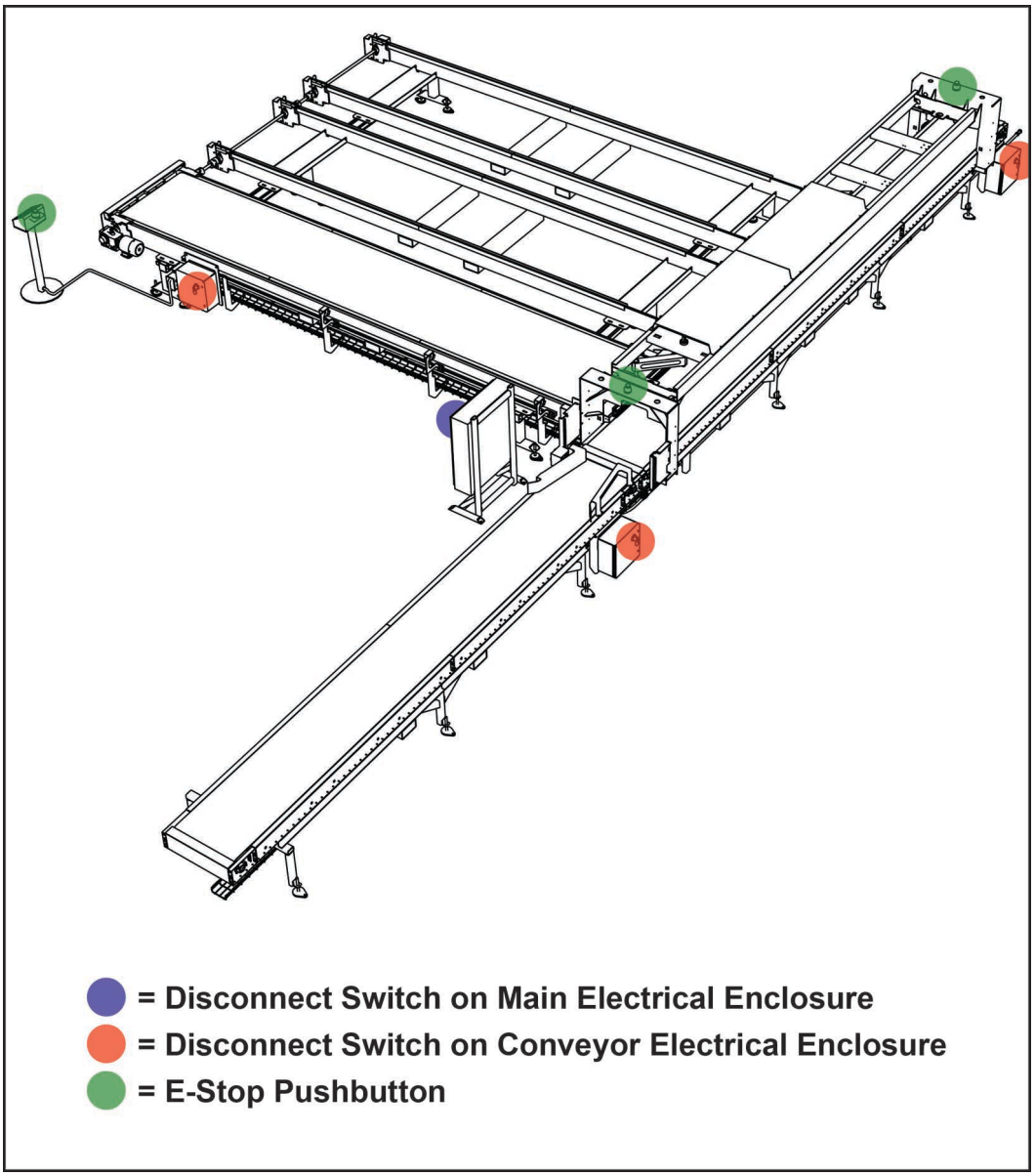

Electrical Lockout/Tagout Procedures

Working on a Machine Outside the Machine's Main Electrical Enclosure

If you are working in an electrical enclosure or on the electrical transmission line to the machine, follow the procedure on page xiv.

Before performing maintenance on any machine with electrical power, lockout/tagout the machine properly. When working on a machine outside of the machine's main electrical enclosure, not including work on the electrical transmission line to the machine, follow your company's approved lockout/tagout procedures which should include, but are not limited to the steps here.

Page xii shows the location of the disconnect switch handle on the main electrical enclosure.

1. Engage an E-stop on the machine.
2. Turn the disconnect switch handle on the main electrical enclosure to the Off position.

	⚠ WARNING
	ELECTROCUTION HAZARD. **When the disconnect switch is off, there is still live power within the disconnect switch's enclosure. Always turn off the power at the building's power source to the equipment before opening this electrical enclosure.**

Figure SAFETY-3: Main Electrical Enclosure with Lock and Tag

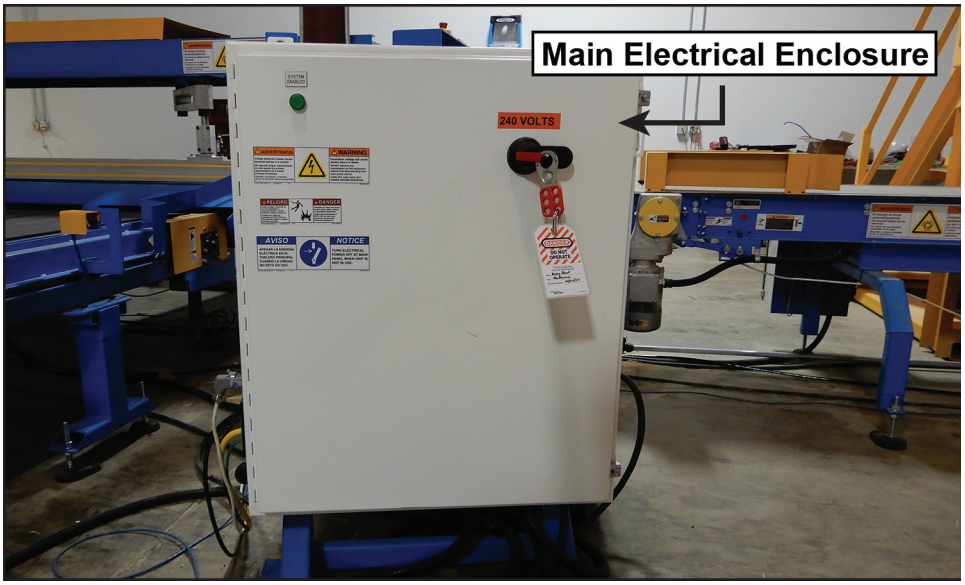

3. Attach a lock and tag that meet OSHA requirements for lockout/tagout.
4. Restrain or de-energize all pneumatic components and other parts that could have live or stored power.

Working on a Machine Inside the Machine's Main Electrical Enclosure or in the Electrical Transmission Line to the Machine

Before opening the main electrical enclosure, or attempting to repair or replace an electrical transmission line to the machine, lockout/tagout the machine properly. Follow your company's approved lockout/tagout procedures which should include, but are not limited to the steps here..

1. Engage an E-stop on the machine
2. Shut the power to the machine off at the machine's power source which is usually an electrical service entry panel on the facility wall. One example of a locked-out power source panel is shown in Figure SAFETY-4.
3. Attach a lock and tag that meets OSHA requirements for lockout/tagout.
4. Open the door to the enclosure in which you need access, and using a multimeter, verify that the power is off.

Figure SAFETY-4: Sample of a Lockout/Tagout Mechanism on a Power Source Panel

Pneumatic Lockout/Tagout Procedure

	⚠ CAUTION
	HIGH PRESSURE HAZARD. **Bleed all pressure from pneumatic lines before performing maintenance on or near pneumatic components.** **Pressurized components may move suddenly or vent air to atmosphere, causing injury.**

Most procedures involving the pneumatic system require the removal of pressure. Use the following procedure to remove pressure from the system.

1. Locate the pneumatic assembly on the *CDS*. See Figure 6-21 on page 41 for an illustration of the pneumatic assembly.
   The pneumatic assembly on the CDS *is separate from the pneumatic assembly on the* MatchPoint® BLADE *wood processing system.*
2. Push the yellow slide on the filter / regulator up.
3. Lockout/tagout through the hole on the slide.

Troubleshooting with an Energized Machine

Only a qualified electrician, using the personal protective equipment and following the procedures recommended in NFPA 70E should ever attempt service or repair of or near an energized area or component of the machine.

Whenever maintenance is performed while the equipment is electrically energized, there is a potential electric arc flash hazard. Refer to NFPA 70E for the personal protective equipment required when working with electrically energized components. Pneumatic and hydraulic components may move unexpectedly if not de-energized. Physically restrain any components capable of movement when working on or near those components.

Safety Tests

This test procedure MUST be performed by qualified personnel at startup and after ANY maintenance, adjustment, or modification. Testing ensures that the safety system and machine control system work together to stop the machine properly.

	DANGER
	If the CDS fails any part of this safety test, fix the problem before proceeding to the next step. **Operating a CDS that has failed any part of the safety test may result in serious physical injury or death.**

Inspecting the *CDS*

1. Check the *CDS* for debris or tools that would block the path of parts. Remove any that you may find. The following locations are especially important:
   - the staging, push, sort, and transfer conveyor belts;
   - the pusher on the push conveyor; and
   - the outfeed hood of the *BLADE* saw.
2. Check the physical condition of the *CDS*. The following are especially important:
   - The staging conveyor chains should be on their guides.
   - The belts on the staging, push, sort, and transfer conveyors should be intact without cracking or splitting.
   - The filter / regulator gauge should match the pressure recommendation specified on page 42.
   - The pushers should be resting to either side of the push and sort conveyors.
3. Turn the disconnect switch handle on the main electrical enclosure to the On position.
4. Make sure the *BLADE* saw has power. Press the *Reset* button on the *BLADE* saw. Verify the following:
   - lights on E-stop pushbuttons should be illuminated green;
   - the power indicator lights on the light grid bars should be illuminated green; and
   - the system enabled light on the main electrical enclosure should be illuminated green.

See page xii for the location of the E-stop pushbuttons.

See page 5 for the location of the light grid bars.

Checking the Function of the E-Stop Pushbuttons

This portion of the safety test is most easily accomplished with a second person.

1. Open the CDS diagnostics tab on the *BLADE* PC.
   For more information about the CDS diagnostics tab, see page 17.
2. Select the conveyor closest to the *BLADE* saw. Start the conveyor.
3. Test the safety circuit using the following steps.
   a) Depress an E-stop pushbutton. See *page 15* for more information about E-stop pushbuttons. Verify that the following happen when the pushbutton is depressed:
      - the conveyor should stop moving immediately;
      - the E-stop pushbutton should blink red; and
      - all other E-stops should turn solid red.

   b) Return to the CDS diagnostics tab on the *BLADE* PC.

   c) Select the conveyor closest to the *BLADE* saw. Attempt to start the conveyor. Verify that the following happens:
      - The conveyor should not move.
4. If the conveyor does not move, twist the E-stop pushbutton to release it.
5. Press the blue Reset button on the *BLADE* saw.
6. Start operation.

Actuating an E-stop on the *BLADE* saw or the *CDS* does not stop the operation of the *Ranger*™.

Restricted Zone

	DANGER
	Stay out of the restricted zone when equipment is in use. Serious injury or death may result if personnel are in the restricted zone. **Always look for personnel in the restricted zone before operating equipment.**

Figure SAFETY-5: Restricted Zone on Sample *CDS*

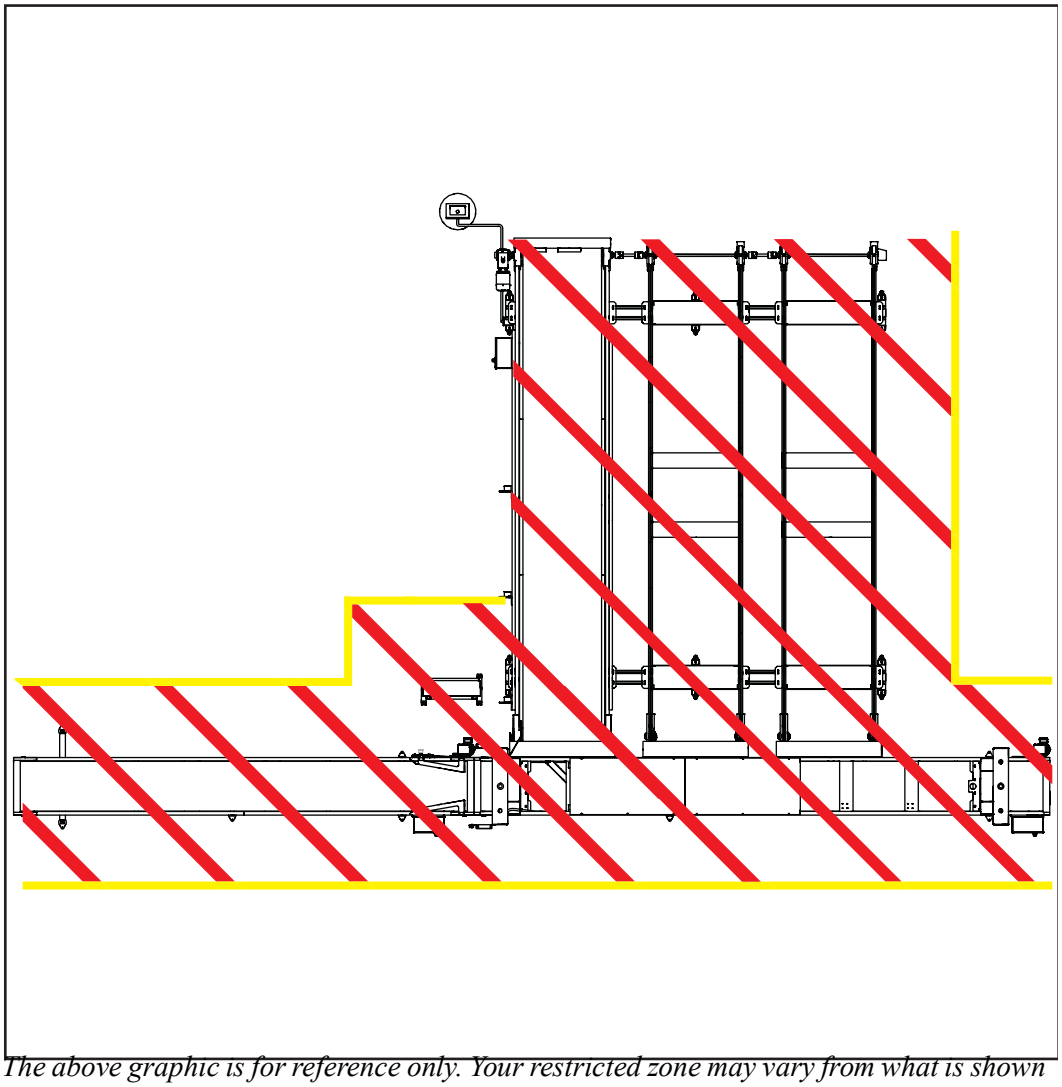

The above graphic is for reference only. Your restricted zone may vary from what is shown above based on your specific CDS *system.*

Marking the Restricted Zone

The restricted zone must be marked so everyone near the equipment can clearly see the area where danger may exist. See page 11 for more details.

Safety Symbol Definitions

The safety symbols shown in this section are found throughout the manual to indicate hazards related to this machine. All personnel expected to operate or maintain this machine should be familiar with these safety symbols and their meanings.

User caution. It indicates a condition where equipment damage resulting in injury could occur if operational procedures are not followed. To reduce risk of damage or injury, refer to accompanying documents, and follow all steps or procedures as instructed.

Electrical hazard. It indicates dangerous high voltages inside of an enclosure and/or the presence of a power source. To reduce the risk of fire or electric shock, do not attempt to open the enclosure or gain access to areas where you are not instructed to do so. Refer servicing to qualified service personnel only.

This equipment should be operated only from the type of source indicated on the manufacturer's identification label. Installation should be in compliance with applicable sections of the national electric code. Consult your local building code before installing.

Crush hazard. Keep hands clear.

Noise hazard. Equipment produces loud noise in excess of 100 DBA during operation. Use appropriate PPE to protect hearing when in the vicinity of this equipment.

Slip hazard. Use of appropriate footwear is required.

Trip hazard. Pay attention when walking in this area.

Keep hands and body clear.

Crush hazard from above.

Hot surface. Surface temperature can exceed 158°F (70°C) during normal operation. Do not touch.

Ventilate. Slots and openings in the cabinet are provided for ventilation to ensure reliable operating of the equipment. To protect the equipment from overheating, those openings must not be blocked or covered. This equipment should not be placed in a built-in installation, such as a wall cutout, unless proper ventilation is provided because hot temperatures result.

Operation of this equipment may result in flying debris and excessive noise. To reduce the risk of eye injury, wear only approved PPE.

Keep feet away from moving parts.

Keep hands away from moving parts.

High pressure hose. Use appropriate PPE when working on equipment. Maintain safe pressure level at all times.

Use sling equipment rated for at least ___ lbs / ___ kgs when lifting this equipment.

Hard hat area. Watch for falling debris or material when working in this location.

Equipment has automatic restarting capability. Lockout/tagout on the upstream disconnect before servicing.

The operation of this equipment requires the use of PPE.

Do not operate without wearing the required protective clothing.

Refer to manual. After installation, read the manual carefully before operating. Follow all operating and other instructions carefully.

Circuits are live. Lockout/tagout on the upstream disconnect prior to servicing.

Lockout in a de-energized state.

Lift point. In order to decrease the likelihood of damage to the equipment, use only the lift points indicated in the manual.

Open switch before adjusting equipment.

To reduce the risk of equipment damage or injury to personnel, maintain pressure at safe levels.

Use of lift equipment is mandatory.

Consult material safety data sheet.

Read all safety warnings and instructions before proceeding.

Unplug equipment before servicing.

Hazardous moving parts are located behind this access panel. Do not operate this equipment without all guards and covers in place.

Do not place containers with liquids such as coffee, water, soda, etc. on this equipment.

Do not operate this equipment in a wet environment.

Do not expose to water.

No lift point. Do not lift this device with a hook/crane assembly. Equipment damage occurs. Refer to the installation instructions.

Do not step or stand upon this equipment. Stepping or standing on this equipment may result in serious injury.

Not a step. Do not step or stand at this location.

Do not use a fork lift when moving this equipment. Use of a fork lift may result in equipment damage. Refer to installation procedures.

Do not use unapproved lubricants in this equipment.

Unauthorized personnel are not allowed beyond this point.

Do not operate without guards in place.

Do not weld.

Do not discard into the municipal waste stream.

Declaration of Safety Conformity

Conforms electrically to the following:

- NFPA 79
- NEC Electrical Code
- Electrical enclosures carry UL 508A and the CUL for Canada
- Safety circuit conforms to Category 3 redundant monitoring

Conforms mechanically to the following:

- 10CFR 1910
- ANSI B 11.19

Seguridad (Español)

Objetivo del Capítulo

Este capítulo explica la información general y los procedimientos específicos para operar la máquina de manera segura.

Indicadores de seguridad: Palabras de aviso

Las siguientes palabras y colores de aviso se utilizan a lo largo de este documento para indicar riesgos de seguridad. Preste suma atención cuando los vea. El nivel de gravedad es diferente por cada palabra o color de aviso.

Las palabras de aviso van acompañadas por gráficos que muestran al personal lo que deben y no deben hacer. Los gráficos se llaman símbolos de seguridad y se definen en la página xix, pero se proporciona un texto más específico cada vez que se utiliza un gráfico por todo el manual. Todas las personas que estén cerca de una máquina tienen que ser capacitadas en cómo leer estos indicadores de seguridad.

No cumplir las instrucciones que acompañan cada palabra de aviso puede producir daños a la propiedad, lesiones personales e incluso la muerte. El personal debe seguir todos los procedimientos y prácticas de seguridad establecidos para asegurar el uso más seguro posible de este equipo. No obstante, en ningún caso este documento reemplaza el sentido común. El personal debe asegurarse de que el entorno de trabajo sea seguro y esté libre de distracciones.

PELIGRO Indica una situación de peligro inminente que, si no se evita, ocasionará la muerte o graves lesiones.
ADVERTENCIA Indica una situación potencialmente peligrosa que, si no se evita, podría producir la muerte o lesiones graves.
PRECAUCIÓN Indica una situación potencialmente peligrosa que, si no se evita, puede producir lesiones menores o moderadas.
AVISIO Llama la atención a información importante para entender la operación que se desea realizar o daños a la propiedad probables.
AMBIENTAL Se aplica a condiciones que pueden afectar el entorno pero que no tienen un efecto inmediato o directo sobre el personal o el equipo.

Reglas de seguridad para el equipo de general

Debido a la imposibilidad de anticipar todas las circunstancias que podrían constituir un riesgo, la información de seguridad suministrada en este manual del equipo y sobre la máquina no es exhaustiva. Si se utiliza o realiza el mantenimiento de esta máquina utilizando un procedimiento no recomendado específicamente por el fabricante, el procedimiento deberá ser aprobado por un ingeniero profesional para asegurarse de que no afecte la seguridad del equipo. ¡Manéjese siempre con suma precaución y sentido común!

Conozca su equipo

- Lea este manual en su totalidad antes de utilizar o mantener el equipo. No utilice esta máquina a menos que esté perfectamente familiarizado con los controles, los dispositivos de seguridad, los frenos de emergencia y los procedimientos operativos que se describen en este manual.
- Lea y siga todas las notas de seguridad. El no cumplimiento de estas instrucciones podría producir pérdidas económicas, daños a la propiedad y/o lesiones personales, incluida la muerte.
- Refiérase a las pautas de bloqueo/etiquetado proporcionadas en las siguientes páginas para realizar el mantenimiento y solucionar problemas de este equipo en forma segura.
- Observe y cumpla con todas las etiquetas de seguridad. Cambie las etiquetas gastadas inmediatamente.
- Utilice este equipo únicamente para el propósito que se describe en este manual.
- Sólo personal calificado debe intentar utilizar o realizar el mantenimiento de este equipo. Por "personal calificado" se entiende:

  …una persona o personas que, por el hecho de poseer un título o certificado de capacitación profesional reconocido o que, por sus amplios conocimientos o experiencia, han demostrado con éxito estar capacitados para resolver problemas relacionados con el tema y el trabajo en cuestión—ANSI B30.2-1983

  ...una persona que posee habilidades y conocimientos relacionados con la construcción y uso de equipos e instalaciones eléctricas y que ha recibido capacitación en seguridad sobre los riesgos posibles—NEC 2002 Handbook

Seguridad personal

- Use siempre lentes de seguridad y protección auditiva en un entorno industrial.
- Utilice una máscara protectora cuando trabaje cerca de aserrín.
- Utilice ropa adecuada y equipo de protección personal apropiado (por ejemplo, lentes de seguridad y protección auditiva.) No use ropa suelta ni joyas. Si tiene el cabello largo, áteselo para atrás.
- Proceda con precaución cuando levante piezas o materiales pesados.

Instalació del equipo

- Siga las instrucciones de instalación al pie de la letra.
- No utilizar este equipo en zonas residenciales.

Bloqueo/Etiquetado

- El símbolo del candado azul y la etiqueta en el margen indica que deben seguirse los procedimientos de bloqueo y etiquetado adecuados antes de iniciar el procedimiento al que se refiere el símbolo.
- Antes de realizar el mantenimiento de los sistemas neumáticos, purgue las líneas para eliminar la presión.
- Bloquee y etiquete todos los sistemas energizados antes de realizar tareas de mantenimiento en ellos. Refiérase a la sección *Pautas de bloqueo/etiquetado* en la página xxxi.

Cómo manterner un entorno seguro

- Mantenga alejados a los niños. Todos los visitantes deben mantenerse a una distancia segura del área de trabajo. Los riesgos pueden no ser evidentes a las personas no familiarizadas con la máquina.
- Mantenga las áreas de trabajo bien iluminadas.
- Mantenga el área de trabajo limpia y libre de cualquier riesgo de tropiezo o resbalamiento.
- No utilice el equipo en lugares húmedos o mojados y no lo exponga a la lluvia o a la nieve.
- Minimice las nubes de polvo y proteja su equipo quitando el polvo de la siguiente manera:

	AVISO
	¡No utilice nunca aire comprimido dentro de una caja eléctrica! Puede forzar sustancias contaminantes hacia el interior de las conexiones eléctricas. Utilice un aspirador para eliminar polvo de las cajas eléctricas. Es aceptable utilizar aire comprimido después de aspirar.

  - Aspire el polvo antes de soplarlo con aire
  - Apague la alimentación eléctrica y todas las fuentes de ignición
  - Si usa aire comprimido, debe ser a compresión baja (no más de 15 psi)
  - El equipo eléctrico de limpieza como las aspiradoras debe cumplir con los códigos del gobierno local para uso en condiciones polvorientas.

Uso y mantenimiento del equipo

- Asegúrese de que no haya personas, herramientas y objetos extraños en las zonas restringidas antes de utilizar este equipo. Las zonas restringidas se indican en la página xxxviii.
- Realice pruebas de seguridad para verificar que todos los frenos de emergencia funcionen adecuadamente antes de utilizar el equipo al principio de la puesta en marcha y después de realizar cualquier tarea de mantenimiento.
- En caso de que la máquina no funcione correctamente, deténgala inmediatamente utilizando un freno de emergencia e informe el problema a un supervisor.
- No deje nunca la máquina encendida si no está junto a ella. ¡Apáguela! No la abandone hasta que todas las piezas se detengan completamente y hasta que se haya apagado la alimentación eléctrica.
- Verifique periódicamente que no haya piezas gastadas o dañadas. Repárelas o cámbielas inmediatamente.
- Mantenga los sistemas neumáticos y eléctricos en buen funcionamiento en todo momento. Repare las fugas y las conexiones sueltas inmediatamente. No exceda nunca la presión ni potencia eléctrica recomendadas.
- Verifique que todos los dispositivos de seguridad estén en buen funcionamiento antes de comenzar cada turno. Todos los dispositivos protectores y de seguridad deben estar en su lugar antes y durante el uso de la máquina. No desconecte ni evite nunca ningún dispositivo de seguridad ni interbloqueo eléctrico.
- Solo el personal de mantenimiento calificado puede quitar o instalar los dispositivos de seguridad.
- Inspeccione periódicamente la calidad del producto terminado.

Seguridad eléctrica

- No utilice líquidos en el interior de los gabinetes eléctricos.
- Cuando utilice disolventes sobre o alrededor de la máquina, desconecte la alimentación para eliminar las probabilidades de chispas, que pueden producir una explosión o incendio. Use un respirador aprobado para el uso con disolventes. Use ropa protectora, guantes y lentes de seguridad.

Bloqueo/Etiquetado

Pautas de bloqueo/etiquetado

Deben cumplir con todas las pautas de bloqueo/ etiquetado conforme a la norma OSHA 29 CFR 1910.147. El programa de control de energía de la compañía debe incluir un procedimiento específico. El objetivo de este manual no es reemplazar el procedimiento de desenergización o bloqueo/ etiquetado requerido por la OSHA, sino proporcionar pautas orientativas generales.

El término "bloqueo", según se utiliza en este manual, se refiere a la colocación de un dispositivo de bloqueo en las fuentes de energía para asegurar que el dispositivo aislador de energía y el equipo controlado por éste no puedan reenergizarse o utilizarse hasta que se retire dicho dispositivo. Las fotos en la página xxxii siguiente muestran los lugares en los que se encuentran los interruptores de desconexión eléctrica de esta máquina.

- Las fuentes de energía incluyen energía eléctrica, mecánica, hidráulica, neumática, química, térmica y otras.
- En el caso de fuentes de energía eléctrica, la alimentación principal y la alimentación de control a la maquinaria deben apagarse y bloquearse físicamente en la posición "off" (apagado).

	AVISO
	El gabinete eléctrico principal suministra electricidad a los gabinetes eléctricos de los transportadores. **Incluso cuando el interruptor de desconexión en el gabinete eléctrico de un transportador esté en la posición “Off” (Apagado), los demás transportadores aún tendrán electricidad.** **Vea la ubicación de los interruptores de desconexión en un *CDS* de muestra en la página xxxii.**

- Por lo general, como dispositivo de bloqueo se utiliza un candado con llave.

Si hay más de una persona trabajando en una zona restringida, utilice un dispositivo de bloqueo grupal que permita a cada persona utilizar un candado que sólo pueda ser retirado por la persona que realiza el mantenimiento.

Siempre que vea este símbolo, ¡Bloquee/Etiquete!

Figura SEGURIDAD-1: Ubicación del interruptor de desconexión y el pulsador de paro de emergencia en el *CDS* de muestra

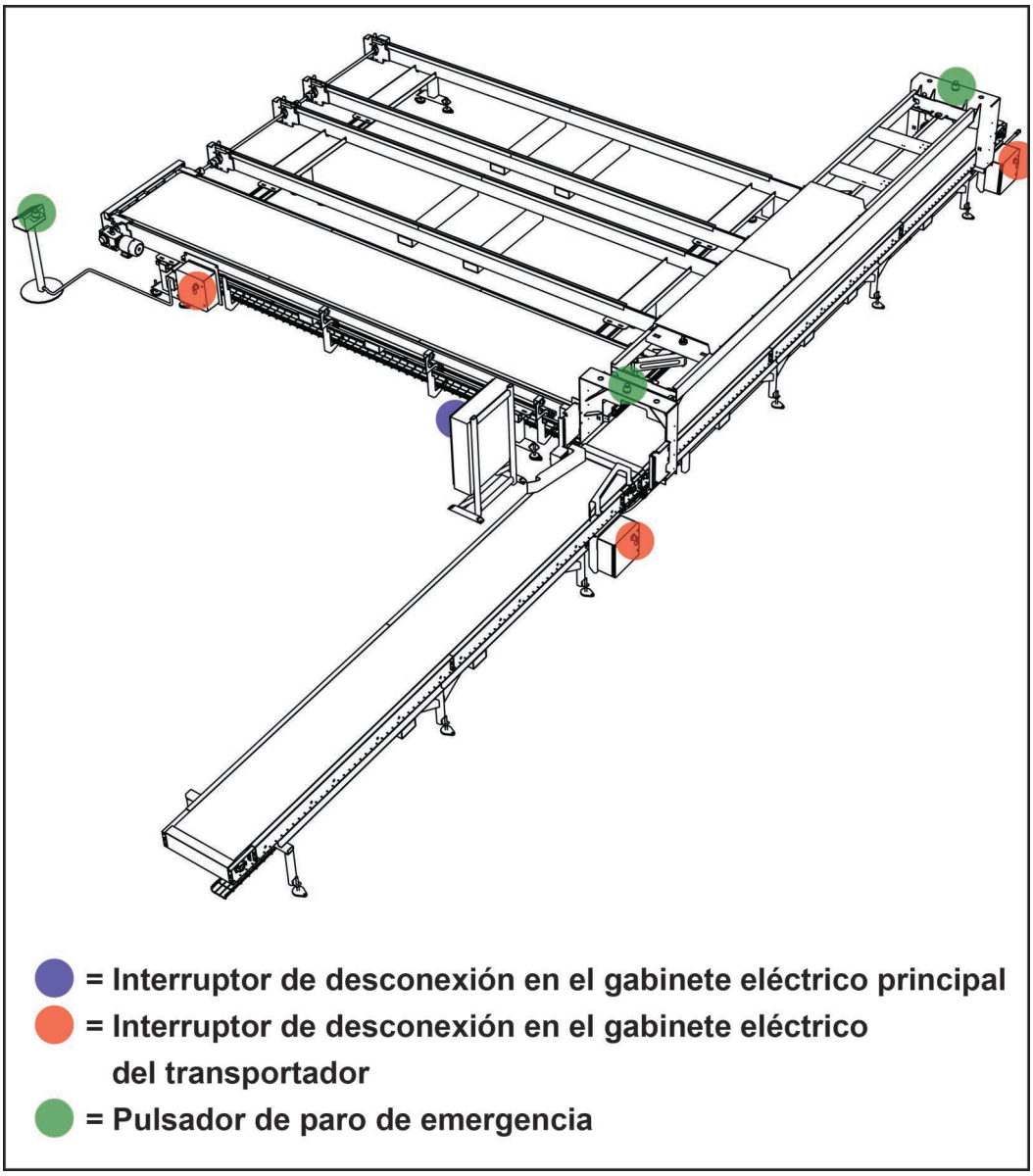

Procedimientos de bloqueo/etiquetado eléctricos

Cuando trabaja en una máquina fuera del gabinete eléctrico principal de la máquina

Si trabaja en la línea de transmisión eléctrica a la máquina, siga el procedimiento de la página xxxiv.

Antes de realizar el mantenimiento de cualquier máquina con alimentación eléctrica, bloquee y etiquete la máquina de forma adecuada. Cuando trabaje en una máquina fuera del gabinete eléctrico principal de la máquina, salvo en el caso de trabajos en la línea de transmisión eléctrica a la máquina, siga los procedimientos de bloqueo/etiquetado aprobados por la compañía, los cuales deberían incluir, entre otros, los pasos aquí indicados.

1. Coloque un freno de emergencia sobre la máquina.
2. Coloque el mango del interruptor con fusibles en la posición "apagado". Vea la Figura SEGURIDAD-2.

	⚠ ADVERTENCIA
	RIESGO DE ELECTROCUCIÓN. **Cuando el interruptor con fusibles está apagado, sigue habiendo energía dentro del gabinete del interruptor. ¡Apague siempre la alimentación en la fuente de alimentación del edificio antes de abrir este gabinete eléctrico!**

Figura SEGURIDAD-2: El gabinete eléctrico principal

3. Coloque un candado y una etiqueta que cumplan con los requisitos de bloqueo/etiquetado de la OSHA.
4. Trabe o desenergice todos los componentes neumáticos y otras piezas que tengan alimentación directa o almacenada.

Cuando trabaje en una máquina dentro del gabinete eléctrico principal de la máquina o en la línea de transmisión eléctrica a la máquina

Antes de abrir el gabinete eléctrico principal o intentar reparar o reemplazar una línea de transmisión eléctrica a la máquina, bloquee y etiquete la máquina en forma adecuada. Siga los procedimientos de bloqueo/etiquetado aprobados por la compañía, los cuales deberían incluir, entre otros, los pasos aquí indicados.

1. Coloque un freno de emergencia sobre la máquina.
2. Apague la alimentación a la máquina en la fuente de alimentación, que, por lo general, es un panel de entrada de suministro eléctrico que se encuentra en una pared de las instalaciones. En la Figura SEGURIDAD-3 se muestra un ejemplo de panel de fuente de alimentación bloqueado.
3. Coloque un candado y una etiqueta que cumplan con los requisitos de bloqueo/etiquetado de la OSHA.
4. Abra la puerta del gabinete al que necesita acceder y usando un multímetro verifique que la alimentación esté apagada.

Figura SEGURIDAD-3: Ejemplo de un mecanismo de Bloqueo/Etiquetado en un panel de entrada de suministro eléctrico

Procedimiento de bloqueo o etiquetado del sistema neumático

	⚠ PRECAUCIÓN
	RIESGO DE ALTA PRESIÓN. **Purgue toda la presión de las mangueras neumáticas antes de realizar alguna tarea de mantenimiento en los componentes del sistema neumático o cerca de ellos.** **Los componentes presurizados pueden moverse repentinamente o emanar aire a la atmósfera, lo que puede causar lesiones.**

La mayoría de los procedimientos del sistema neumático requieren la liberación de la presión. Utilice el siguiente procedimiento para liberar la presión del sistema.

1. Localice el ensamble neumático en el CDS. Vea en la Figura 6-1 de la página 27 una ilustración del ensamble neumático.
   El ensamble neumático del CDS *está separado del ensamble neumático en el sistema de procesamiento de madera* BLADE *de* MatchPoint®.
2. Empuje hacia arriba la corredera amarilla en el filtro o regulador.
3. Bloquee o etiquete el orificio en la corredera.

Solución de problemas con una máquina energizada

Sólo un electricista calificado que utilice el equipo de protección personal y siga los procedimientos recomendados en la norma NFPA 70E debe intentar realizar tareas de reparación o mantenimiento en un área o componente energizados de la máquina o en su proximidad.

Cada vez que se realizan tareas de mantenimiento mientras el equipo está eléctricamente energizado, existe un riesgo potencial de formación de un arco eléctrico. Consulte en la norma NFPA 70E el equipo de protección personal requerido para trabajar con componentes eléctricamente energizados. Los componentes neumáticos e hidráulicos pueden moverse de manera imprevista si no se desenergizan. Trabe físicamente cualquier componente que pueda moverse cuando deba trabajar en ellos o en su proximidad.

Pruebas de seguridad

Este procedimiento de prueba DEBE ser realizado por personal calificado al momento de iniciar el sistema y después de CUALQUIER tarea de mantenimiento, ajuste o modificación. Las pruebas permiten comprobar que el sistema de seguridad y el sistema de control de la máquina funcionen juntos a fin de detener la máquina correctamente.

	⚠ PELIGRO
	Si el *CDS* falla cualquier parte de esta prueba de seguridad, corrija el problema antes de proceder al siguiente paso. **Operar un *CDS* que ha fallado cualquier parte de la prueba de seguridad podría resultar en una lesión grave o la muerte.**

Inspección del *CDS*

1. Verifique que el CDS no tenga desechos o herramientas que pudieran obstruir sus piezas. Retire lo que pueda encontrar. Los siguientes lugares son especialmente importantes:
   - las bandas transportadoras de preparación, empuje, clasificación y transferencia;
   - el empujador de la banda de empuje; y
   - la campana de salida de la sierra BLADE.
2. Revise la condición física del CDS. Lo siguiente es especialmente importante:
   - Las cadenas de la banda de preparación deben estar sobre sus guías.
   - Las bandas en los transportadores de preparación, empuje, clasificación y transferencia deben estar intactas, sin grietas ni fisuras.
   - El calibrador del filtro o regulador debe seguir la recomendación de presión especificada en la página 42.
   - Los empujadores deben descansar en cada extremo de los transportadores de empuje y clasificación.
3. Coloque el mango del interruptor de desconexión en el gabinete eléctrico principal en la posición “On” (Encendido).
4. Verifique que la sierra BLADE esté conectada. Presione el botón “Reset” (Restablecer) en la sierra BLADE y verifique lo siguiente:
   - las luces en los pulsadores de paro de emergencia deben estar encendidas de color verde;
   - las luces indicadoras de potencia en las barras de la rejilla de iluminación deben estar encendidas de color verde; y
   - la luz de activación del sistema en el gabinete eléctrico principal debe estar encendida de color verde.

Vea en la página xxxii la ubicación de los pulsadores de paro de emergencia.

Vea en las páginas 5 la ubicación de las barras de la rejilla de iluminación.

Verificación de la función de los pulsadores de paro de emergencia

Esta sección de la prueba de seguridad se realiza más fácilmente con la ayuda de otra persona.

1. Abra la pestaña de diagnóstico del *CDS* en la computadora de *BLADE*.
   Para mayor información acerca de la pestaña de diagnóstico del CDS*, vea la página 17.*
2. Seleccione el transportador más cercano a la sierra *BLADE* y enciéndalo.
3. Pruebe el circuito de seguridad siguiendo estos pasos:
   a) Presione un pulsador de paro de emergencia. Para más información sobre los pulsadores de paro de emergencia, vea la página 15. Verifique que suceda lo siguiente al presionar el pulsador:
      - el transportador debe detenerse de inmediato;
      - el pulsador de paro de emergencia debe parpadear en color rojo; y
      - todos los demás paros de emergencia deben cambiar a color rojo.
   b) Regrese a la pestaña de diagnóstico del *CDS* en la computadora de *BLADE*.
   c) Seleccione el transportador más cercano a la sierra BLADE e intente encenderlo. Verifique que suceda lo siguiente:
      - El transportador no debe moverse.
4. Si el transportador no se mueve, gire el pulsador de paro de emergencia para liberarlo.
5. Presione el botón “Reset” azul en la sierra *BLADE*.
6. Comience la operación.

Activar un paro de emergencia en la sierra *BLADE* o el *CDS* no detiene la operación del Ranger™.

Zona Restringida

	⚠ PELIGRO
	Manténgase afuera de la zona restringida cuando el equipo esté en uso. Pueden producirse lesiones graves o incluso la muerte si el personal está en la zona restringida. **Asegúrese que no haya personal en la zona restringida antes de operar el equipo.**

Figura SEGURIDAD-4: Zona restringida en el *CDS* de muestra

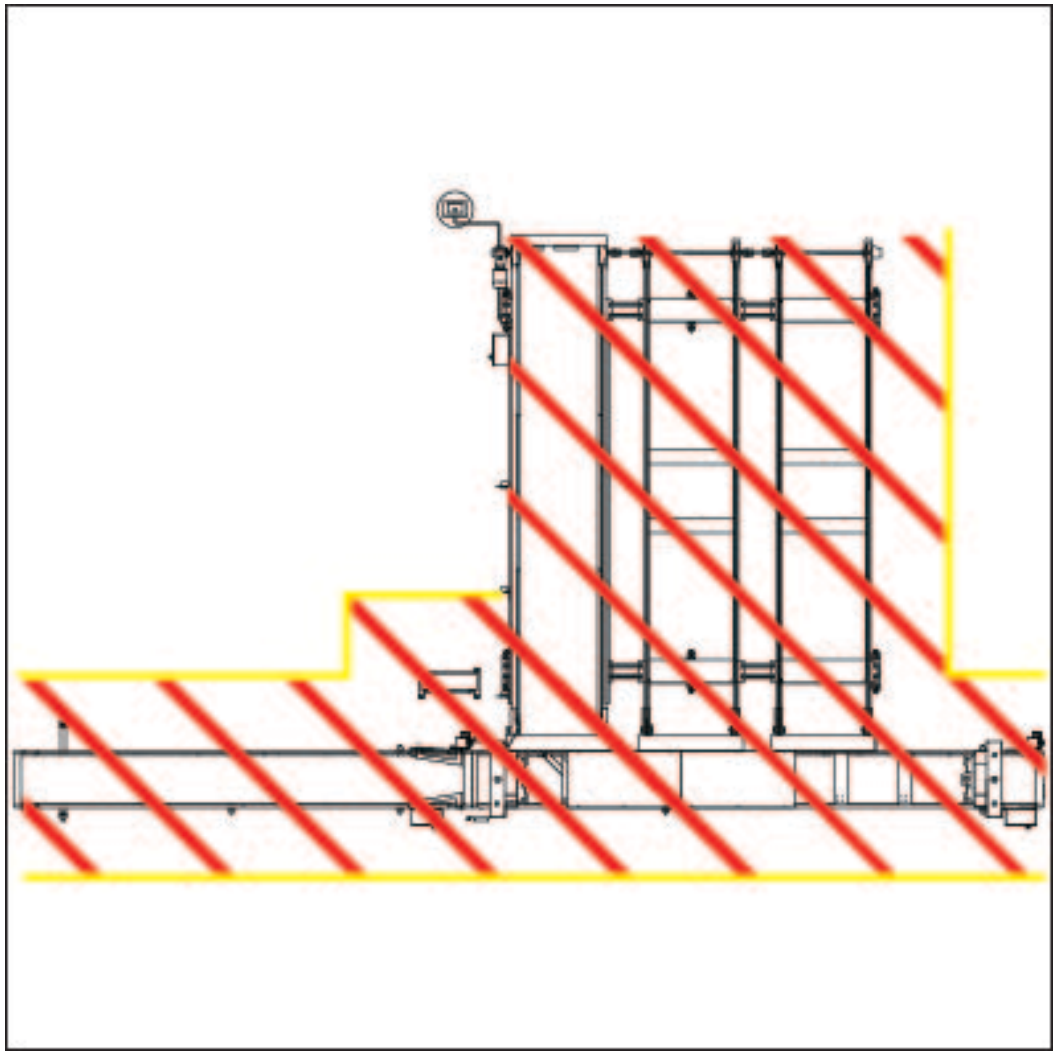

La gráfica anterior es únicamente para referencia. Su zona restringida puede variar de la mostrada arriba, según su sistema específico de CDS.

Marcación de la zona restringida

La zona restringida deberá marcarse de tal manera que todas las personas que se encuentren cerca del equipo puedan ver claramente el área donde pueda haber peligro. Vea más detalles en la página 11.

Información adicional

Definiciones de los símbolos de seguridad (Safety Symbols Definitions)	página xix
Declaraciones de Cumplimiento (Declarations of Conformity)	página xxvi

Introduction

Purpose of Chapter

This chapter explains how to navigate through the manual and how to contact MiTek Machinery Division Customer Service.

Introduction to the Manual

	⚠ WARNING
	Read this manual completely before using this equipment. **Do not operate this equipment until you have a thorough understanding of all controls, safety devices, emergency stops, and operating procedures outlined in this manual.** **All hazard instructions must be read and observed. Failure to do so may result in economic loss, property damage, and/or personal injury.** **This manual must always be available to personnel.**

Purpose and Scope of the Manual

In order for this manual to be useful, it must be accessible.

This manual addresses the most recent version of the equipment as of the date listed on the title page. For earlier revisions, contact MiTek Machinery Division Customer Service.

This manual is a valuable training tool.

- The *Introduction* and *General Information* chapters discuss contact information for MiTek and provide basic information about the *CDS*.
- The *Operation* chapter teaches operators how to operate the *CDS* efficiently.
- The *Maintenance* chapter details procedures specifically for maintenance personnel.
- The appendices provide valuable training materials and technical information to keep your *CDS* running.

Understanding the Manual

The Drawing Set

The drawing set is included with this manual. A list of the drawings can be found in the Drawing Set appendix on page 62.

Navigational Aids

The graphics used in Table 1-1 are used throughout the manual to communicate a specific type of information quickly.

Table 1-1: Navigational Aids

Graphic	Explanation
	This icon is an important safety note. It indicates that you must lockout/tagout at the disconnect switch located on the equipment using approved methods described in OSHA CFR 1910.147 before continuing with the procedure.
	This icon specifies that certain tools are needed before a procedure begins.
	This icon provides additional information to supplement the main text.
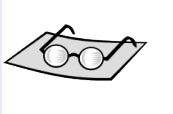	This icon indicates how to locate additional relevant information or resources.
PN	This icon indicates that a part number for the item being discussed is located in the *Parts List* appendix.

Formatting Cues

In this manual, some procedures may involve interacting with a computer. These procedures include text with specific formatting.

Table 1-2: Formatting Cues for Instructions on a Computer

Text Appearance	Indication	Example
All caps	Key on keyboard or button on screen	Press ENTER
Initial cap and italics	Menu, field, or virtual button that you must find or select	Click the *File* menu
Initial cap only and no italics	Menu, field, or virtual button referenced	While in the Main Menu
Plus (+)	Hold buttons at the same time	CTRL+ALT+DELETE
Greater than (>)	Next selection, often used in file paths	*File* > *Open*

Additional Resources

Website

Visit the MiTek website at www.mitek-us.com for up-to-date information on all MiTek equipment. You may also find the following information there:

- The latest revisions of this manual
- Service bulletins pertaining to your equipment
- Support, safety, and training information
- Part numbers for ordering parts

Phone or E-mail Support

To obtain expert technical assistance or to order parts, contact MiTek Machinery Division Customer Service using one of the following methods.

Table 1-3: Contact Information

MiTek Machinery Division
Customer Service Department
301 Fountain Lakes Industrial Drive
St. Charles, MO 63301

Parts Orders (with part number)
E-mail: mitekparts@mii.com

Technical Assistance
Phone: 800-523-3380
Fax: 636-328-9218
machinerysupport@mii.com

Website
www.mitek-us.com

General Information

Purpose of Chapter This chapter provides an overview of the equipment and the means to identify it.

Introduction to the Equipment

Purpose of the Equipment

The purpose of the *CDS* (*Component Delivery System*) is to convey parts from a saw directly to an assembly station.

Description of the Equipment

The *CDS* comprises a series of modular conveyors to handle and store parts. These conveyors and their roles are described starting on page 5.

Safety Compliance of the Equipment

Equipment shipped to a U.S. destination is compliant NFPA 79, NEC 2009, and applicable OSHA regulations.

This manual covers the U.S. version of the equipment.

Component Descriptions

Transfer Conveyor

The transfer conveyor uses a belt to move parts through the system. Several lengths are available to meet individual plant needs.

Figure 2-1: Main Components of the Transfer Conveyor

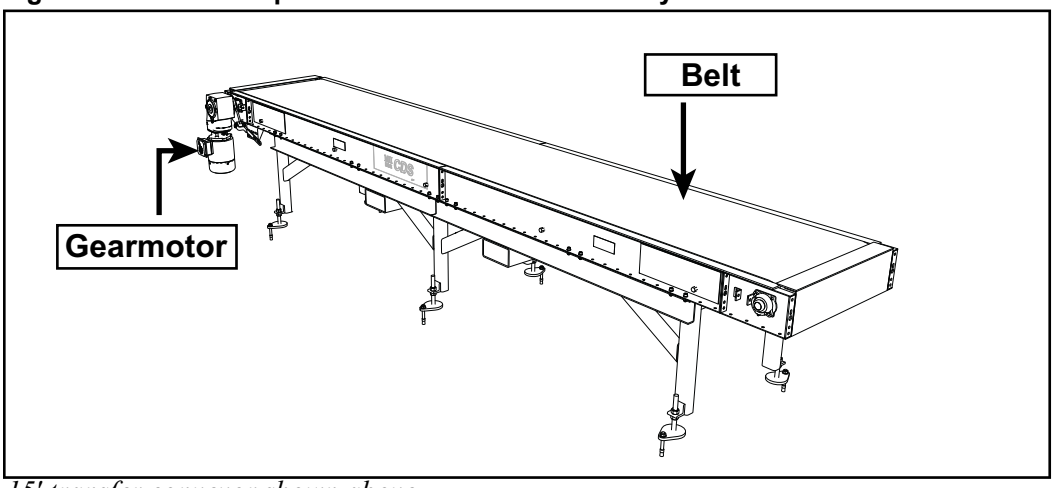

15' transfer conveyor shown above

Push Conveyor

The push conveyor has two functions. First, it moves parts onto a staging conveyor or gravity conveyor. Second, it transfers parts to another conveyor elsewhere in the system.The push conveyor is available in a trailing-edge or leading-edge configuration.

In the trailing-edge configuration, shown in Figure 2-2, the pusher mechanism is triggered when the trailing edge of the part has passed and the light grid bars are no longer interrupted. In the leading-edge configuration, the pusher mechanism is triggered when light grid bars are broken by the leading edge of the part.

Be careful not to break the light grid bars, as this can interfere with the part routing.

Figure 2-2: Main Components of the Push Conveyor (Trailing-Edge Configuration)

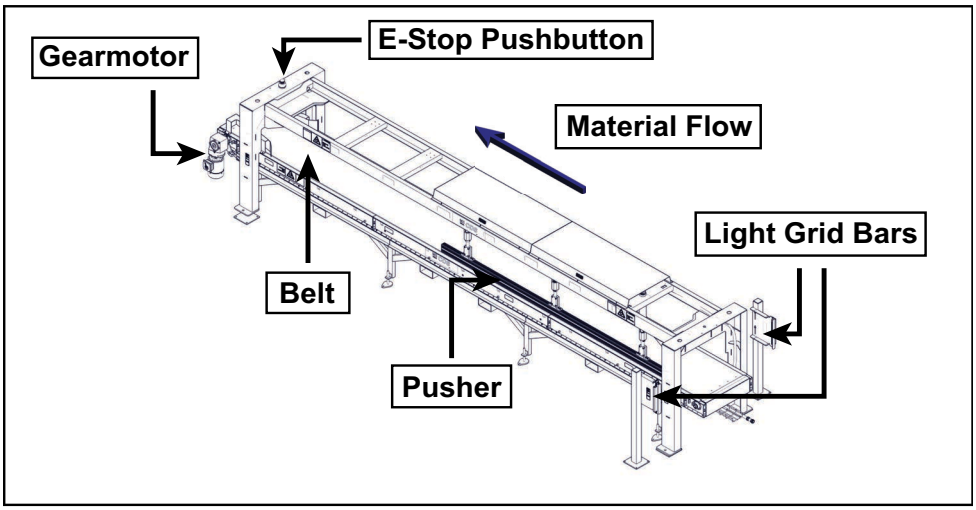

Staging Conveyor

The staging conveyor receives parts from the push conveyor. It uses a belt in conjunction with chains to move the part toward the assembly station. The parts are staged truss by truss. Sensors start, stop, and set the speed of the belt according to work flow conditions.

A reverse sensor slightly reverses and then pauses the belt when an operator approaches to ease access to parts. For more detailed information about the operation of these sensors see *Staging Conveyor Sensors Description* on page 19.

Figure 2-3: Main Components of the Staging Conveyor

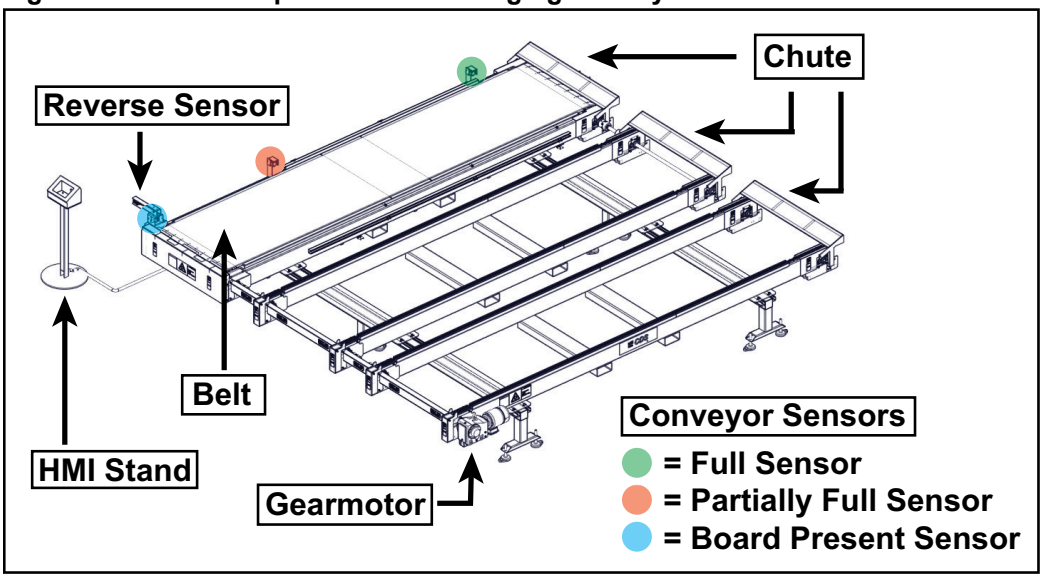

Bridge

The bridge provides pedestrians with safe, easy access to either side of the system.

Figure 2-4: Bridge

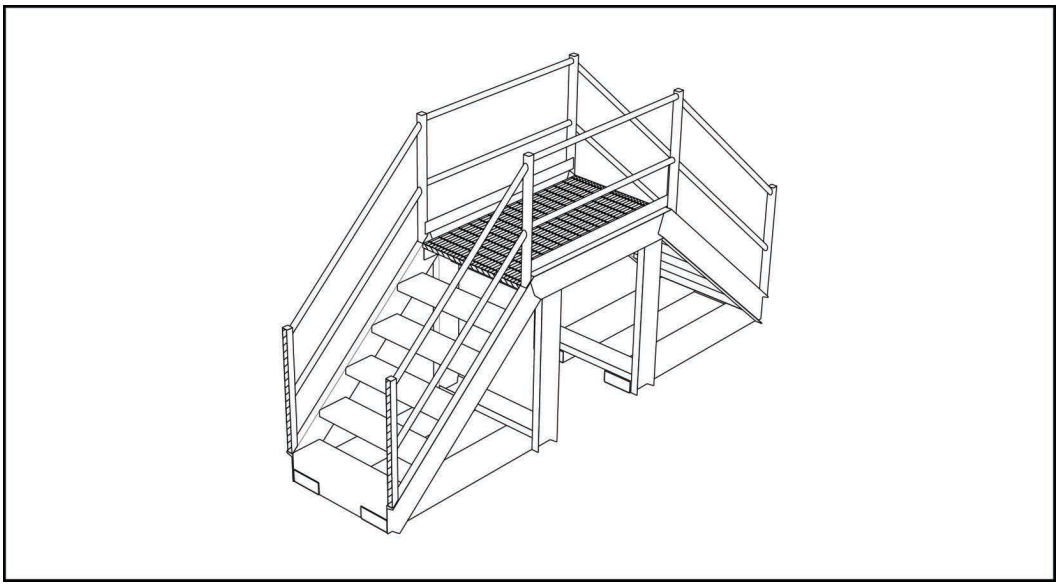

Gravity Conveyor

The gravity conveyor uses rollers to remove remainders and waste from the main workflow. A gravity conveyor may be stationed next to a push conveyor or sort conveyor.

Common Components

Some major components are found on all versions of the *CDS*, regardless of the specific configuration. See Table 2-1 for a list of some of these components.

Table 2-1: Main Components

Component	Description
CDS Conveyors	See *Component Descriptions* for a description of each conveyor type
Bridge	The bridge provides pedestrians with safe, easy access to either side of the system
Remote HMI station	Houses and charges tablet; includes an E-stop mounted to the enclosure

Technical Specifications

The following tables provide technical data about the components of the *CDS* system. For electrical and pneumatic specifications, see page 10.

Table 2-2: General Specifications

Specification	Technical Data
Transfer conveyor speed	523 fpm (maximum)
Staging conveyor speed	150 fpm (maximum)
Maximum part length	20'
Minimum part length	2"
Acceptable part dimensions	2 x 3" to 2 x 12"

Table 2-3: Approximate Weight Specifications

Component	Technical Data (lbs.)
Transfer conveyor	—
5' transfer conveyor	742
10' transfer conveyor	1103
15' transfer conveyor	1501
20' transfer conveyor	1864
25' transfer conveyor	2248
30' transfer conveyor	2550
35' transfer conveyor	2385
Push conveyor	3456
Sort conveyor	1834
Staging conveyor	5319
Belt drive assembly	2387
Drive chain assembly	1180
Support leg assembly	216
HMI stand	71
Bridge	1893
Narrow gravity conveyor	223
Wide gravity conveyor	395

Table 2-4: Approximate Dimensional Specifications

Component	Length	Width	Height
Transfer conveyor	5', 10', 15', 20', 25', 30', or 35'	4' 3"	3'
Push conveyor	25' 2"	4' 3"	5' 6"
Sort conveyor	10'	4' 3"	5' 7"
Staging conveyor	22' 10"	17' 1"	3' 1"
Bridge	13' 8"	3' 4'	7' 7"
Narrow gravity conveyor	5' 2"	2' 1"	2' 9"
Wide gravity conveyor	5' 2"	4' 11"	2' 9"

Installation

Purpose of Chapter This chapter explains the requirements for installation and details MiTek's responsibilities.

Installation Requirements

The *CDS* is intended to operate in an industrial environment that is enclosed and protected from the elements. In addition, the building that houses the *CDS* must satisfy certain requirements to ensure proper function.

Environmental Requirements

Operating Temperature

The *CDS* operates properly in its intended ambient temperature, from 40 to 122 degrees Fahrenheit (4 to 50 degrees Celsius).

Relative Humidity

The *CDS* operates properly in an atmosphere with 45 to 85 percent relative humidity.

Transportation and Storage

The *CDS* withstands or has been protected against transportation and storage temperatures from -13 to 158 degrees Fahrenheit (-25 to 70 degrees Celsius). It has been packaged to prevent damage from the effects of normal humidity, vibration, and shock.

	ENVIRONMENTAL
	Do not discard machinery into the municipal waste stream.

Infrastructure Requirements

Flooring Requirements

The *CDS* needs to be installed on a floor made of 3500 PSI concrete that is a minimum of 6" thick. The floor needs to be level within 3" across the area of installation.

Pneumatic Requirements

The push and sort conveyors use a pneumatic system to operate their pushers. To reduce condensation in the pneumatic system of the *CDS*, MiTek recommends using a refrigerated dryer. Requirements for the pneumatic system are detailed in Table 3-1.

Table 3-1: Pneumatic System Specifications

Specification	Technical Data
Volume per push conveyor	10 cfm
Volume per sort converyor	10 cfm
Pressure	100 psi
Minimum line	3/4" diameter
Recommended line	1" diameter

Electrical Requirements

The *CDS* requires 230VAC. A system with six conveyors, the maximum amount of conveyors used with a single main electrical enclosure, requires 42.0A at full load. Amperage requirements for the *CDS* may vary based on the number of conveyors used.

Responsibilities During Installation

MiTek supervises the installation to ensure that the *CDS* is installed properly and operates correctly. MiTek will also provide operating and maintenance training at the time the equipment is installed. The customer is responsible for providing all labor and equipment needed to complete the installation.

Responsibilities Before Moving or Selling

	⚠ WARNING
	Call MiTek Machinery Division Customer Service before moving the system. **Moving the system without proper planning may result in equipment damage or serious injury.**

If you determine that you want to move your *CDS* system to another location or you want to sell your system to another company, please call MiTek Machinery Division Customer Service. Customer Service provides information that is needed before installing the system elsewhere.

Customer Service is available at **800-523-3380** Monday through Friday.

Marking Restricted Zone

Marking Area on Your Own

The restricted zone must be marked so everyone near the equipment can clearly see the area where danger may exist. The customer is responsible for marking the restricted zone.

Installing MiTek Restricted Zone Tape

Your equipment arrived with Service Bulletin SB181, which includes restricted zone tape and instructions for installing it. The part number is listed on page 57.

The service bulletin is available online (www.mitek-us.com) as well as through the MiTek Machinery Division Customer Service Department. Follow the instructions contained in SB181 to install the restricted zone tape.

Start Up

Purpose of Chapter This chapter lists procedures required before operating your equipment.

	⚠ WARNING
	Do NOT attempt to start the system without a MiTek representative present. **Starting the system without a MiTek representative present may result in equipment damage, serious injury, and/or death.**

Before your *CDS* operates for the first time, these procedures are performed. See Figure 4-1 to determine MiTek's responsibilities and your responsibilities.

Table 4-1: Startup Procedures

Component	Procedure	Responsibility	Page
Main electrical enclosure	Connect electrical power	MiTek	—
Conveyors	Check motor rotation to make sure conveyor belts move in the right direction	MiTek	47
Filter / regulator assembly	Connect pneumatic lines and set operating pressure for pneumatic system	MiTek	42
Conveyors	Complete safety tests, including E-stop pushbutton function	Customer	xvi

If you decide to move your *CDS* or sell it to another company, please contact MiTek Machinery Division Customer Service. Customer service provides information that is important for removing and reinstalling the system.

Operation

Purpose of Chapter

This chapter describes operating mechanisms on this machine and the procedure to operate it in most circumstances.

Before You Begin

Safety Operating Notes

	⚠ WARNING
	ELECTROCUTION, HIGH PRESSURE, AND CRUSH HAZARDS. **Read this section AND the safety section in the preliminary pages before operating or maintaining this machine.** **Do not operate this machine until you have a thorough understanding of all controls, safety devices, E-stops, and operating procedures outlined in this manual.** **Read and observe all warnings. Failure to do so may result in economic loss, property damage, and/or personal injury.** **This manual must always be available to personnel operating and maintaining this machine.**

	⚠ WARNING
	CRUSH AND CUT HAZARD. **Before turning on the machine, make sure that all personnel and other machines are out of the restricted zone (page xviii).**

	⚠ WARNING
	Do not operate this machine unless all guards and safety devices are in place. **Only qualified maintenance personnel shall repair, remove, or replace guards and safety devices.**

	⚠ WARNING
	The operation of this machine requires the use of PPE. Do not operate without wearing required protective clothing. **Operating this machine without proper PPE may result in injury.**

Stopping the Machine

The *CDS* stops in three ways.

- Someone presses one of the E-stop pushbuttons.
- Someone presses one of the E-stop pushbuttons on the saw.
- The saw ceases cutting and signals the *CDS* to stop after a short interval.
- The saw ceases cutting, and someone turns the Auto / Manual switch on the *BLADE* saw to Manual.

  Make sure that the last part reaches its destination before turning the switch to Manual.

Use E-stops only in emergencies. Using an E-stop to stop the machine regularly may cause two problems. First, it causes excessive wear on components. Second, it stops the saw from cutting and may interfere with the workflow.

E-Stop Pushbutton Overview

An E-stop pushbutton is shown in Figure 5-1. To activate a pushbutton, push the button in. The following events should happen immediately:

- The E-stop that was actuated should blink red.
- The other E-stops should illuminate red.
- The *CDS* should stop movement.

To release a pushbutton, twist the pushbutton. It returns to its extended position. All E-stops turn green again. The *CDS* operates after the safety circuit is reset at the *BLADE* saw.

E-stops are located on the push and sort conveyors, as well as on the HMI (human-machine interface) stand for the staging conveyor.

See Table 5-1 for details about the E-stop on the *CDS* affecting other machines.

Figure 5-1: E-Stop Pushbutton

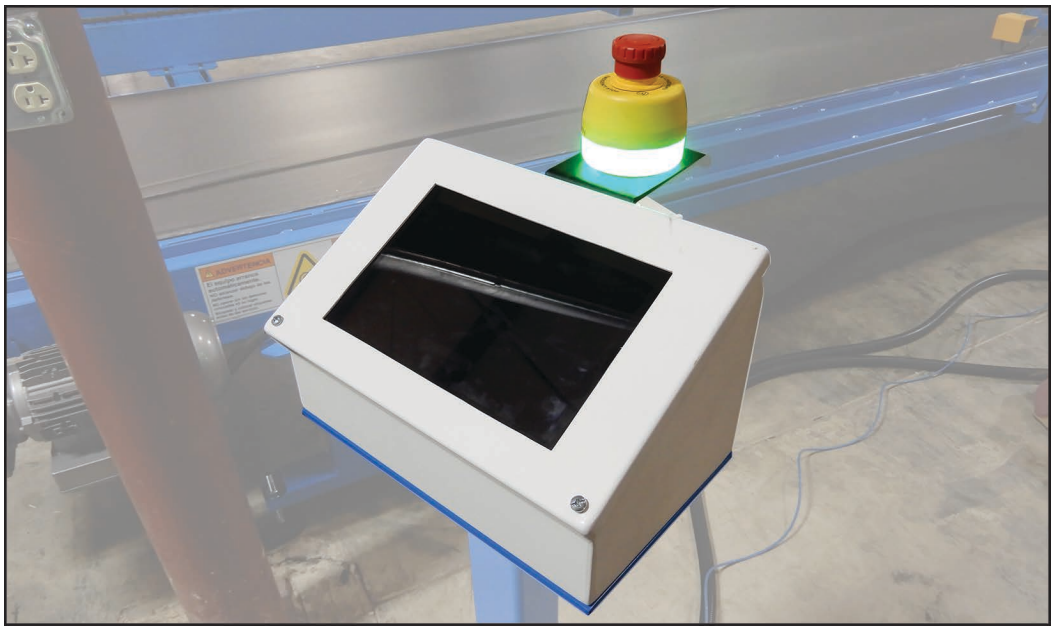

E-Stop Pushbutton Function

The *CDS* is used as part of the *DirectDrive®* system, which includes a *BLADE* saw and which may include a *Ranger* lumber retrevial system. Actuating an E-stop pushbutton on one machine may affect others. See Table 5-1 for further detail.

Table 5-1: E-Stop Function

	Ranger	*BLADE*	*CDS*
An emergency stop on the *Ranger* stops...	X		
An emergency stop on the *BLADE* stops...		X	X
An emergency stop on the *CDS* stops...		X	X

Disconnect Switch

The main electrical enclosure of the *CDS* stands alone. The conveyor electrical enclosures are mounted to brackets on the conveyors. The disconnect switch handles are circled in red in Figure 5-2.

Figure 5-2: Disconnect Switch Location

Main electrical enclosure (Off position)

Conveyor electrical enclosure (On position)

- Turning the disconnect switch handle on the main electrical enclosure to the On position supplies power to that enclosure as well as the conveyor electrical enclosures.
- Turning the disconnect switch handle on the main electrical enclosure to the Off position removes power from that enclosure as well as the conveyor electrical enclosures.

If power to the *CDS* is turned off or is interrupted, restart the *BLADE* software after restoring power to the *CDS*.

The disconnect switch handles on the main electrical enclosure should be turned to the Off position when the *CDS* is not in use.

	⚠ **WARNING**
	Always turn off power at the main power source before opening the main electrical enclosure. **Even when the disconnect switch is turned to the Off position, there is still live power to the main electrical enclosure, where the disconnect switch is mounted. This live power may cause severe electric shock.**

Operating the *CDS*

This manual only addresses the use of the *CDS*. It does not address methods of designing or building a truss.

Operator Controls

Under normal operating conditions, the movements of the conveyors are completely automated. However, some movement of the conveyors is controlled through the BLADE saw software and through a remote HMI station.

Using the *BLADE* Saw PC

The *BLADE* saw software may be used to control the movements of the conveyors when the saw is not cutting. This feature of the software is useful, for example, during a safety test.

Access the CDS controls by using the following steps:

1. Place the *BLADE* saw in Manual mode.
2. Select *Diagnostics* > *Detailed Diagnostics* > *CDS* to view the screen shown in Figure 5-3.

Figure 5-3: *CDS* Diagnostics Screen

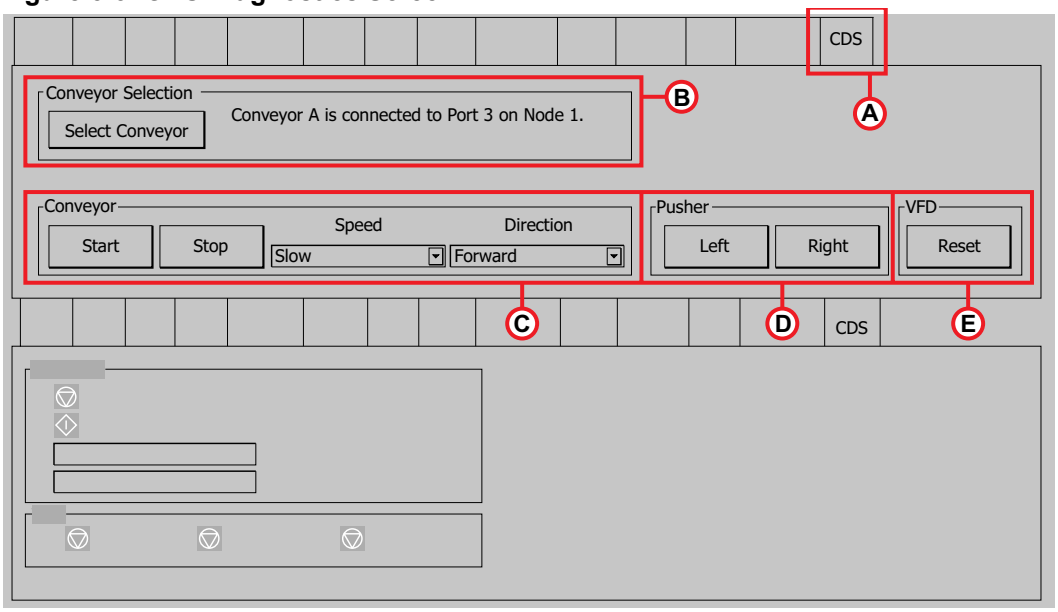

Menu	Function
A	Selects *CDS* detailed diagnostics tab
B	Opens a popup window so that you may select a single conveyor to operate
B	Shows currently selected conveyor and communication information for it
C	Starts and stops the single conveyor selected above
D	Moves the pusher (available only on push and sort conveyors)
E	Resets the VFD after a fault

Using the Staging Conveyor HMI

The staging conveyor uses a tablet-based remote HMI.

- The Forward button moves the parts on the staging conveyor closer to the assembly station.
- The Reverse button moves the parts on the staging conveyor away from the assembly station.
- The Pause button prevents the *Ranger* from picking any more lumber for parts for that assembly station. It does not prevent the staging conveyor from moving.

Figure 5-4: Staging Conveyor HMI

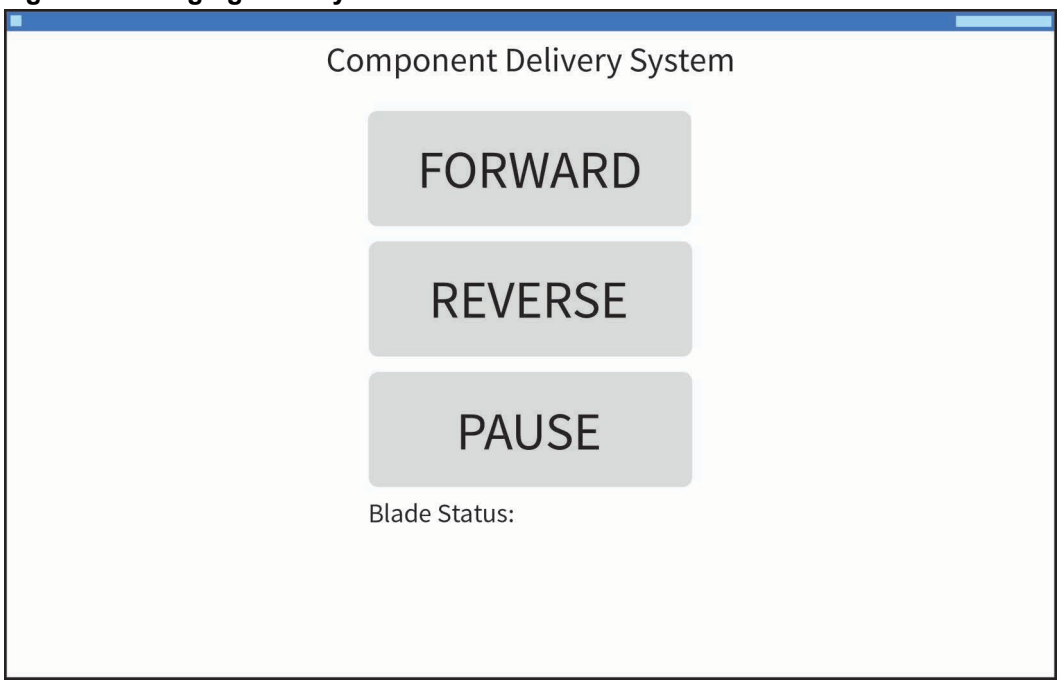

The staging conveyor HMI also displays the status of the saw in real time.

Staging Conveyor Sensors Description

The belt-conveyor side of the staging conveyor includes 4 sensors. These sensors work together to start, stop, and set the speed of the belt according to work flow conditions. The saw starts auto-cutting when a part crosses the light grid sensor on the push conveyor. The staging conveyor belt runs until the run time limit, set in the *BLADE* software, is reached. By default, the conveyor belt speed is set at high, but activation of one or more sensors will reduce the belt speed to medium or low. See below for a description of how each sensor affects CDS operation.

The **Board Present Sensor** detects parts at the end of the conveyor belt. When only this sensor detects a part, the belt speed is reduced to medium. Once the part has been removed, the belt will automatically advance at high speed.

Figure 5-5: Sensor Locations

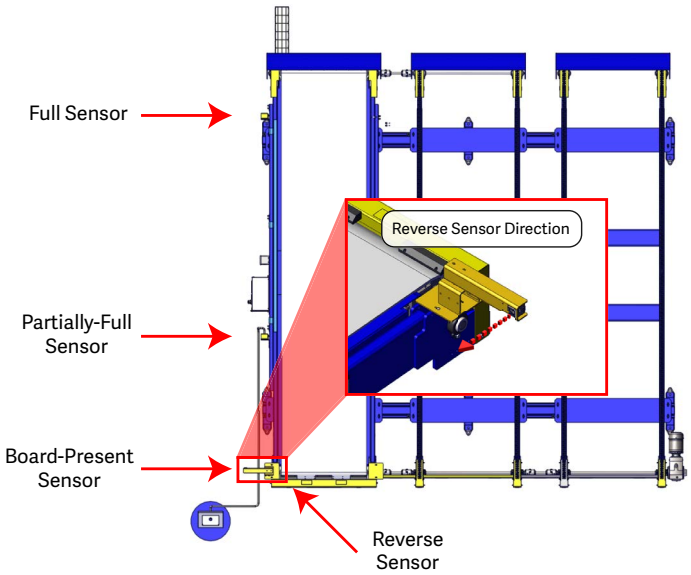

The **Partially-Full Sensor** detects parts at the midpoint of the conveyor belt. If both the **Board Present** and the **Partially-Full Sensor** are activated, the belt speed will be reduced to low until the part has been cleared.

The **Full Sensor** detects a full conveyor load of parts. If there is only one conveyor installed, the saw will pause.

When an operator triggers the **Reverse Sensor** with their hand or body, the belt slightly reverses and then pauses to allow an operator to easily remove a board at the end of the belt. The staging conveyor will then resume normal operation after a few seconds. The reverse sensor in Figure 5-5 is shown in the leading-edge orientation, but the sensor orientation will vary depending on whether the push conveyor is setup in a leading or trailing-edge configuration.

In earlier models, a **Motion Sensor** may be used. This sensor slightly reverses and pauses the conveyor belt to allow an operator to easily remove a board at the end of the belt. If an operator leaves the sensor area or stands still in the sensor area, the staging conveyor will resume normal operation after a few seconds.

Resolving Stoppages

Resolving Missing or Stuck Part Stoppages on the *CDS*

When a part does not reach the push conveyor on time, the *BLADE* saw and *CDS* pause. A window appears on the saw PC. Resolve the error by using the following steps.

If a part goes missing while other parts already on the *CDS*, the other parts continue to their destinations after the error is resolved.

1. Locate the part. Manually move the part to the appropriate station.
   If you are unable to locate the part, continue to step 2.
2. Return to the *BLADE* saw PC.
3. Press *Continue* on the Operator Message window.
   Pressing Continue removes the part from the memory of the CDS. *If the part was not found, you need to cut it again.*

Figure 5-6: Part Missing Error

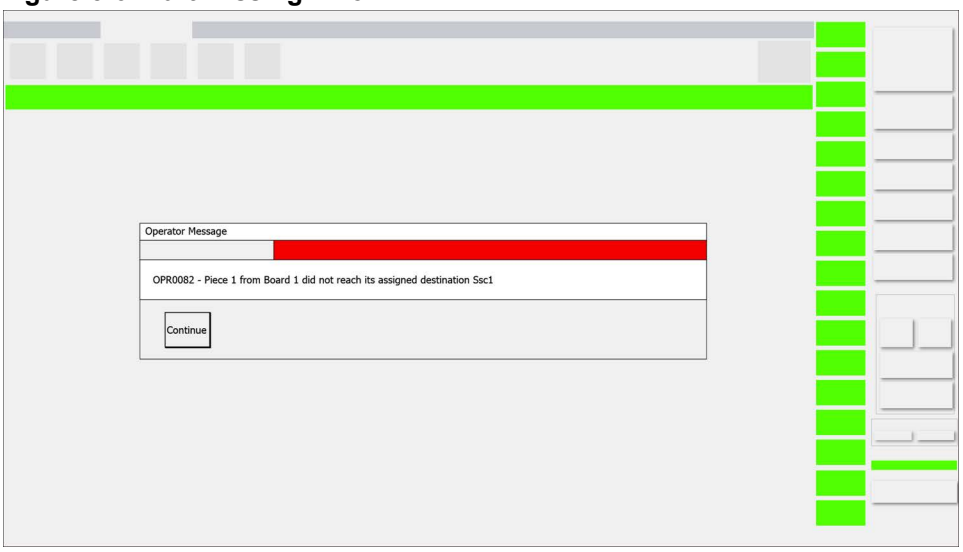

4. Press *Resume Cutting*.

Figure 5-7: Resuming Cutting

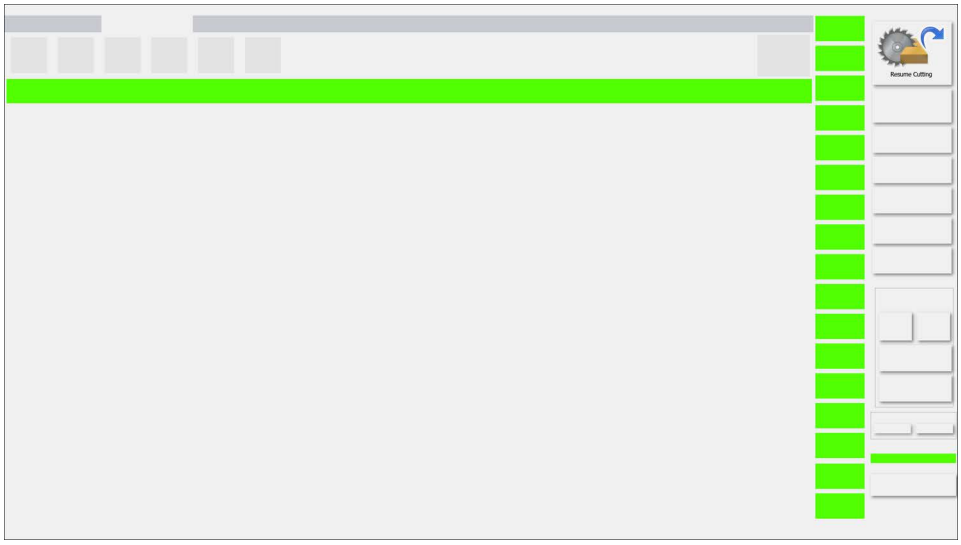

Maintenance

Purpose of Chapter

This chapter provides step-by-step instructions and other information to help you make repairs and perform preventative maintenance.

Content Overview

Maintaining Your Machine 22
Performing Maintenance Safely 22
Important Safety Information 23
Your Responsibilities 23
General Service Rules 23
Making Adjustments and Replacing Parts 25
Testing the Safety of the Machine 25
Mechanical System 26
Bearings 26
Lubricating Bearings 26
Gearmotors 27
Lubricating Gearmotors 27
Chains and Belts 29
Removing Wood Chips and Sawdust from the Conveyors 29
Lubricating Drive Chains on a Staging Conveyor 29
Adjusting Drive Chain Tension on a Staging Conveyor 30
Adjusting Tension on a Staging Conveyor Belt 32
Adjusting Tension on a Staging Conveyor Polyester Belt (Earlier Models) 33
Tracking the Staging Conveyor Polyester Belt (Earlier Models) 35
Adjusting Tension on a Transfer, Push, or Sort Conveyor Belt 39
Pneumatic System 41
Pneumatic Assembly with Filter / Regulator 41
Removing Discharge of the Filter / Regulator 41
Adjusting the Pressure on the Filter / Regulator 42
Replacing a Filter Element on a Filter / Regulator 42
Adjusting Flow Control Valves 43
Electrical System 44
Electrical Enclosures 44
Cleaning Inside Electrical Enclosures 44
VFDs (Variable Frequency Drives) 44
PLC (Programmable Logic Controller) 45
Light Grid Bars 46
Cleaning Light Grid Bars 47
Gearmotors 47
Changing the Rotation of a Gearmotor 47
Sensors 48
Overview of Sensors 48
Cleaning Sensors 48
Staging Conveyor Sensors 48
Reverse Sensor 49
Motion Sensor (earlier models) 50
Direction Adjustment 51
Electrical Adjustments and Indicators 52
Range Dial 53

Maintaining Your Machine

This manual contains sufficient information for proper maintenance under most conditions. Certain environments may require preventative maintenance more frequently.

Review the table of contents and utilize the index to locate the information that you need. The following appendices also assist in maintaining and repairing your machine.

- Troubleshooting
- Parts List
- Maintenance Checklists
- Drawing Set

Because consistent preventative maintenance is so important for keeping your machine in good operating condition, MiTek recommends that you stock certain replacement parts to minimize downtime. See the *Parts List* appendix, starting on page 54.

Read the *Performing Maintenance Safely* section before beginning maintenance on this machine.

Performing Maintenance Safely

Read the safety chapter starting on page vii, and adhere to all rules and guidelines. Review these warnings before operating this machine.

	⚠ WARNING
	ELECTROCUTION, HIGH PRESSURE, AND CRUSH HAZARDS. **Read this section AND the safety section in the preliminary pages before operating or maintaining this equipment.** **Do not operate this machine until you have a thorough understanding of all controls, safety devices, E-stops, and operating procedures outlined in this manual.** **Read and observe all hazard instructions. Failure to do so may result in economic loss, property damage, and/or personal injury.** **This manual must always be available to personnel operating and maintaining this equipment.**

	⚠ WARNING
	CRUSH AND CUT HAZARD. **Before turning on the equipment, make sure that all personnel and equipment are clear.**

Important Safety Information

Your Responsibilities

Detailed descriptions of standard workshop procedures, safety principles, and service operations are not included in this manual. Although this manual contains some warnings and cautions against specific service methods which could cause personal injury or damage to the machine, it does not cover all conceivable ways of service which might be done or the possibility of hazardous consequences of each conceivable way. If you intend to handle, operate, or service the unit by a procedure or method not specifically recommended by the manufacturer, first make sure that such a procedure or method will not render this equipment unsafe or pose a threat to you and others.

It is the responsibility of the mechanic performing the maintenance or service on a particular machine to:

1. Inspect the machine for abnormal wear and damage;
2. Choose a procedure which will not endanger his or her safety, the safety of others, the equipment, or the safe operation of the machine;
3. Fully inspect and test the machine and its pneumatic and electrical systems to ensure that the service to the machine has been properly performed and that the machine and its pneumatic and electric systems will function properly; and
4. Ensure only qualified electricians perform electrical service work.

	⚠ WARNING
	ELECTROCUTION HAZARD. **This machine uses high-voltage electricity, which may cause serious personal injury or death.**

General Service Rules

1. The design may change or upgrades may occur for any particular component. Always contact the factory before replacing components.
2. If inspection or testing reveals evidence of abnormal wear or damage to the machine or if you encounter circumstances not covered in the equipment manual—STOP—and consult MiTek. The machine must be repaired and serviced according to the current specifications and procedures of MiTek, using replacement parts with properties equal to or greater than those specified by MiTek.

3. Use the correct tools and procedures on this machine, to avoid damage and incorrect assembly.

	NOTICE
	Never use compressed air inside an electrical enclosure. It may force contaminants into electrical connections. **Use a vacuum to remove dust from electrical enclosures. Canned air is acceptable after vacuuming.**

4. Always install new gaskets, O-rings, cotter pins, etc., and place Loctite on bolts, if required.
5. Torque bolts and fasteners to the correct specifications.
6. Clean parts in a nonflammable or high-flash-point solvent only.
7. Lubricate any sliding surfaces before assembly.
8. Many components are manufactured from high carbon, heat-treated steel. Do not attempt to cold straighten, hot straighten, bend, or weld these components, as they may fail under load causing serious personal injury or death.
9. After re-assembly, check all parts for proper installation and operation before putting the machine back into service.
10. It is beneficial to record all major maintenance and testing. This allows recurring problems to be predicted and addressed before any production time is lost. Typical reports and records should include:
    - Date
    - Serial number of machine
    - Description of problems or symptoms
    - Corrective action taken
    - Parts required
11. MiTek will, from time to time, mail out service bulletins and updates for this machine. Follow the service bulletins and updates accordingly and file them in this equipment manual.

Making Adjustments and Replacing Parts

Be careful when making mechanical adjustments. Untrained personnel may damage the machine or cause harm to themselves and others.

	⚠ WARNING
	CRUSH HAZARD. **Always replace guards after servicing.** **Only qualified maintenance personnel shall repair, remove, or replace guards and safety devices.**

	NOTICE
	Failure to follow the step-by-step procedures in this chapter may result in incorrect adjustment of this machine. **Only trained maintenance personnel should make adjustments to this machine.** **Use only the exact replacement parts specified in this manual.**

Special materials have been used for some of the components of this equipment. It is critical to the future performance of this machine that only specified replacement parts are used. Order all replacement parts through MiTek. Do not substitute parts without first consulting MiTek to determine if it is safe and effective. No electrical system component, cable, connector, or device should be modified, removed, disconnected, changed without specific approval and guidance from MiTek.

Testing the Safety of the Machine

The test procedure in the *Safety* section starting on page xvi MUST be performed by qualified personnel after ANY maintenance, adjustment, or modification.

Testing makes sure that the safety system and machine control system work together to stop the *CDS* properly. The test should be performed before each shift starts to make sure that the safety features remain in working order.

Mechanical System

Bearings

Lubricating Bearings

Manual grease gun

No. 2 lithium-based grease

The bearings on the conveyors keep the belts and chains rotating. Locations of these bearings are displayed in Figure 6-1.

- The bearings on the staging conveyor need lubrication every month (one shift) or every two weeks (two shifts).
- The bearings on the push, sort, and transfer conveyors need lubrication every week.

Figure 6-1: Conveyor Bearing Locations

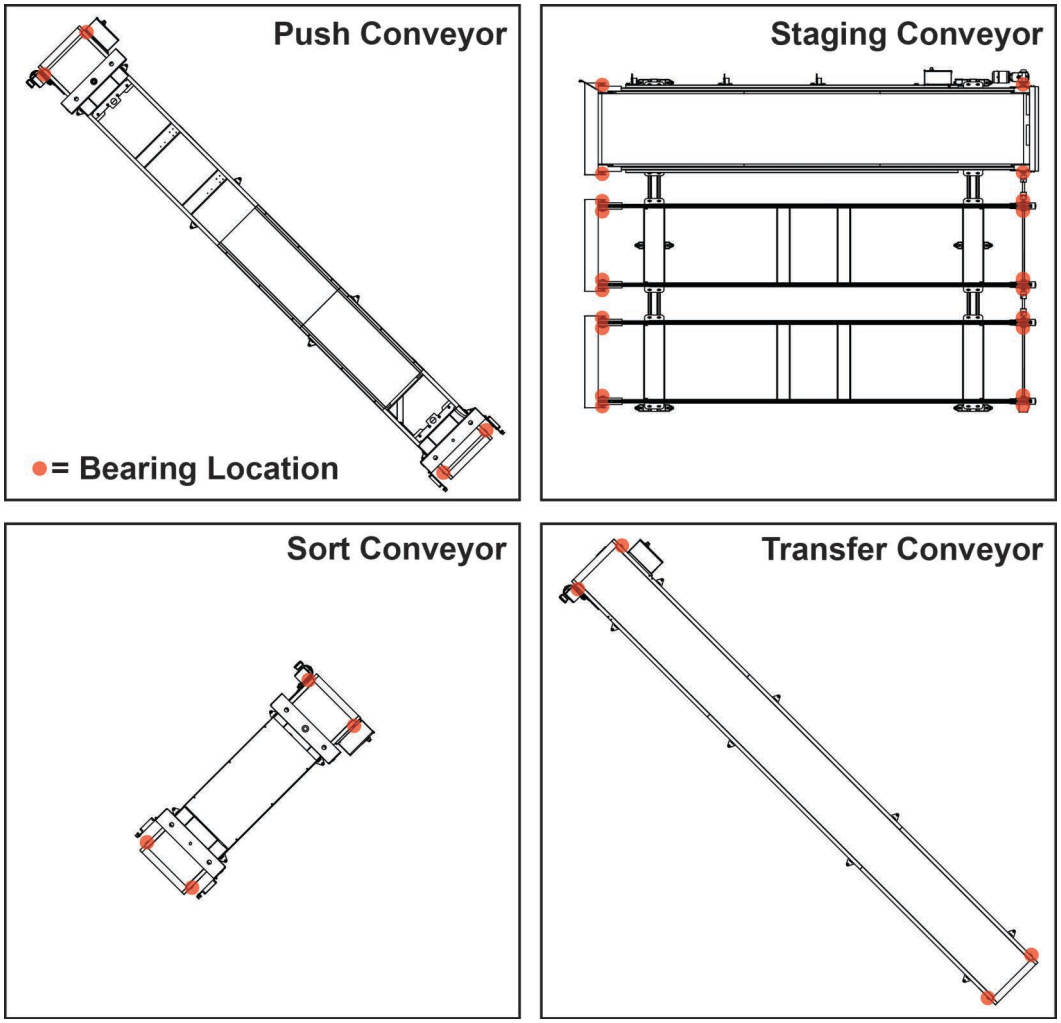

To lubricate the bearings on a conveyor, use the following steps.

1. Locate the grease fitting on the bearing.
2. Clean the fitting thoroughly to remove any dirt or old grease.
3. Place the manual grease gun over the fitting.

4. Add grease to the bearing.
   Pump until you encounter resistance. Adding more grease after you encounter resistance may add too much grease to the bearing.
5. Repeat step 1 through 4 until all bearings are greased.

Gearmotors

Lubricating Gearmotors

The *CDS* uses two models of gearmotor on its conveyors.

- The staging conveyor uses a horizontally mounted gearmotor.
- The push, sort, and transfer conveyors use vertically mounted gearmotors.

Preventative maintenance is required to keep the gearmotors on the conveyors working properly and to prevent costly replacement of the gearmotors.

Figure 6-2: Horizontally and Vertically Mounted Gearmotors

Staging conveyor shown above

Push conveyor shown above

Check the oil in the gearbox once every month (one shift) or every two weeks (two shifts). When additional oil is needed, use the oil recommended in Table 6-1 or a comparable type.

Table 6-1: Oil Used by the Manufacturer

Attribute	Standard
ISO viscosity	VG220
Oil type	Mineral oil with EP additive
Ambient temperature	32° to 104°F (0° to 40°C)
Manufacturer / type	Mobilgear / 600XP220

Shell Omala S2 G 220, Castrol Alpha SP220, and Fuchs Renolin EP220 are alternatives.

Machinery Division Customer Service does not supply lubricants. Please speak with a local supplier to obtain lubricants for your *CDS*.

Drain and refill the oil every two years.

- Use the oil drain plug to remove the old oil.
- Use the oil level plug to add the new oil.

See Figure 6-3 for the locations of the oil drain plug and the oil level plug.

Allen wrench set

Socket wrench set

Oil (see page 27)

Funnel with soft plastic tubing

Container for used oil

Figure 6-3: Oil Level Plug and Oil Drain Plug

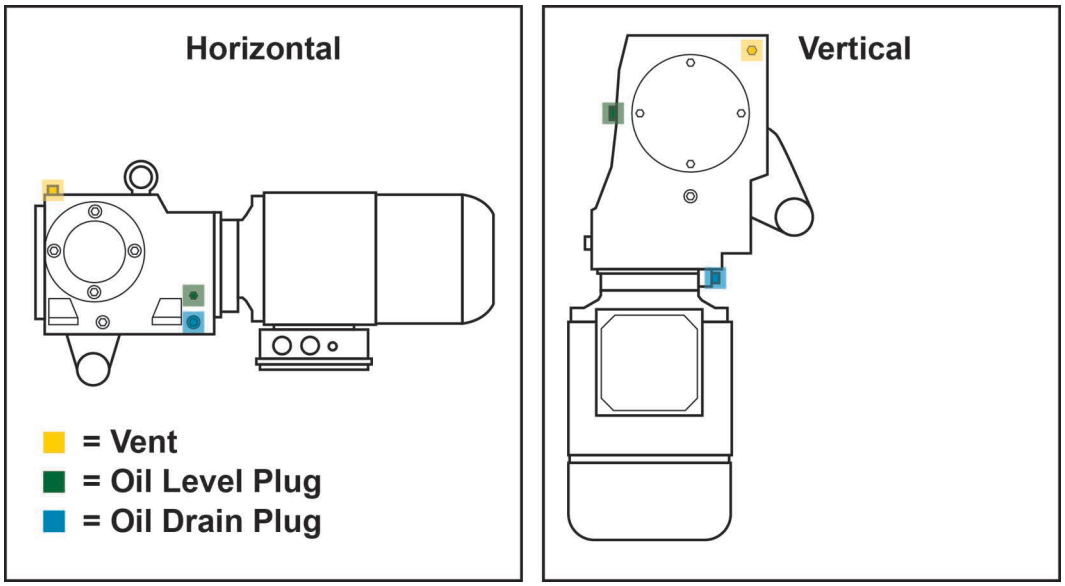

The approximate amount of oil is listed in Table 6-2. This amount of oil should be enough to reach the oil level plug.

Table 6-2: Approximate Oil Fill Level

Conveyor	Gearmotor	Quarts	Liters
Staging conveyor	Horizontal	1.06	1.00
All other conveyors	Vertical	2.08	1.97

Chains and Belts

Removing Wood Chips and Sawdust from the Conveyors

Sawdust and wood chips may accumulate on the conveyors. Remove the wood chips and then vacuum the sawdust. Pay especial attention to the areas between conveyors because wood chips tend to accumulate there.

Lubricating Drive Chains on a Staging Conveyor

Oil

Brush

Rag

The drive chains on the staging conveyor should be lubricated every two months (one shift) or every month (two shifts). Drive chain location is highlighted in green in Figure 6-4.

The lubricant should be a high-grade, non-detergent, petroleum-base oil. Anti-foam, anti-rust, and film-strength improving additives are often beneficial. SAE 30 grade is recommended.

- Apply oil to the links and sides of the insides of the rollers. These areas are highlighted in blue in Figure 6-4.
- Wipe excess oil from the top of the rollers. These areas are highlighted in red in Figure 6-4.

Figure 6-4: Staging Conveyor Drive Chain Locations

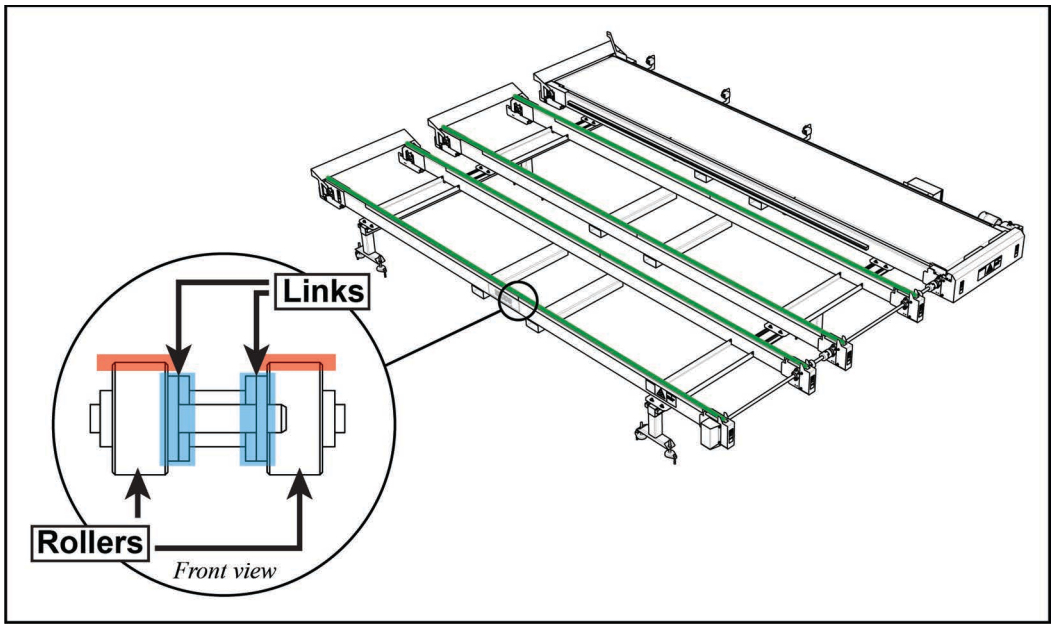

Adjusting Drive Chain Tension on a Staging Conveyor

Socket wrench set

Combination wrench set

The staging conveyor chains adjust using threaded rods that control the position of take-up slide blocks and sprockets. The sprocket position determines the amount of tension. See step 3b on page 31 to determine the correct amount of tension. If necessary, adjust chain tension by using the following steps:

1. Lockout / tagout on main electrical enclosure and the filter / regulator.
2. Locate the take-up housing that supports the take-up slide block for the chain that you are adjusting. The housings are circled in blue in Figure 6-12.

Figure 6-5: Take-Up Housing Location

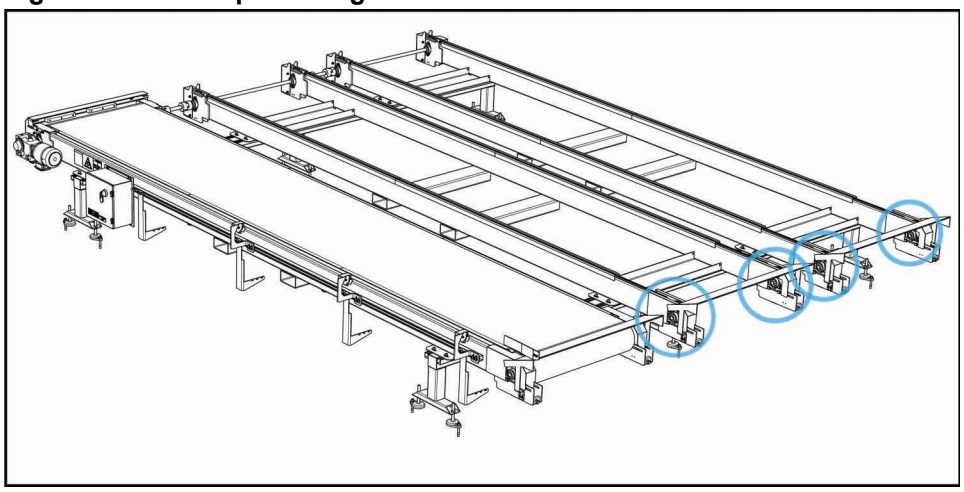

3. Adjust the chain tension using the following steps.
   a) Loosen the four bolts that fasten the take-up slide block to the take-up housing. Two of the bolts are highlighted in red in Figure 6-13. The other two bolts are located on the opposite side of the take-up housing.
      Do not remove the bolts.

Figure 6-6: Take-Up Housing

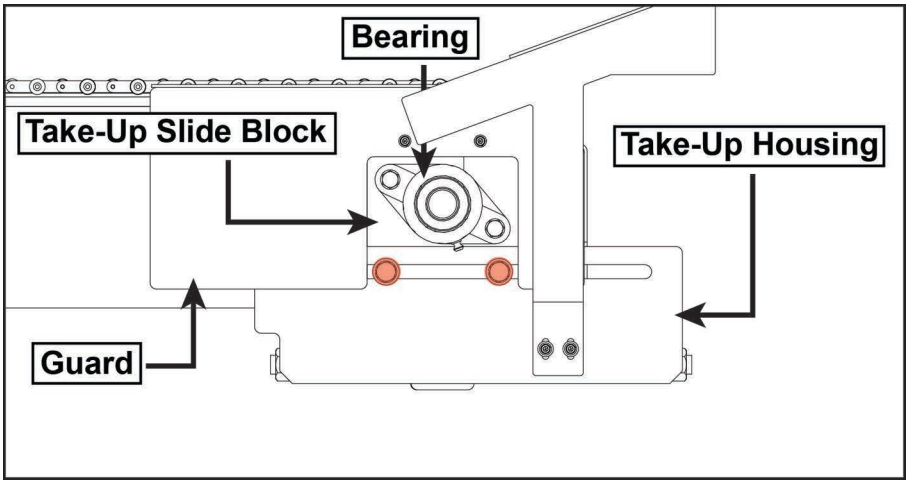

b) Use a socket wrench to turn the nut on the threaded rod to adjust the position of that take-up slide block.

- If the chain has 2" of play in its center, it is tensioned correctly. Continue to step c.
- If the chain has too much or too little play, continue to adjust until you reach the correct amount of tension. Then continue to step c.

Figure 6-7: Tension Adjustment Direction

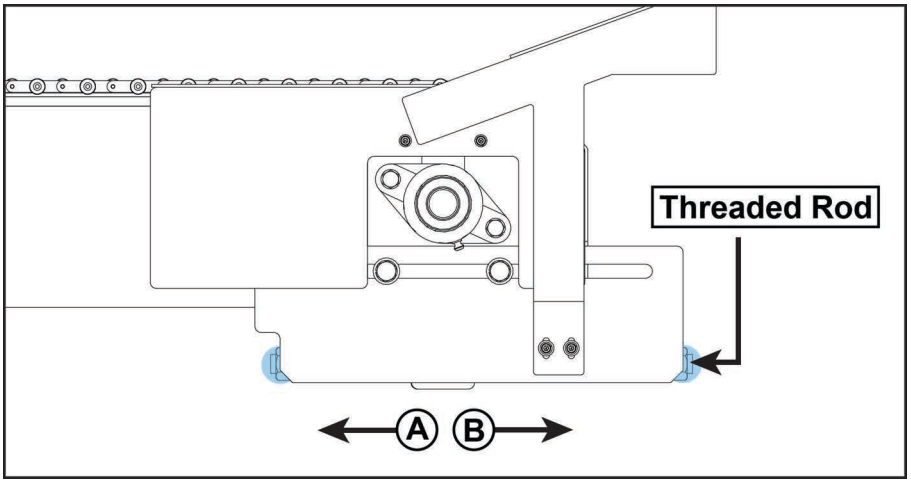

Moving the take-up slide block in direction A decreases tension

Moving the take-up slide block in direction B increases tension

c) Tighten the four bolts that fasten the take-up slide block to the take-up housing.

d) Remove the lock and tag. Restore power and pneumatic pressure to the *CDS*.

Adjusting Tension on a Staging Conveyor Belt

The latest version of the CDS staging conveyor utilizes a plastic belt while earlier models may use a polyester belt. See Figure 6-8 for an example of each belt type. This section covers instructions for tensioning the plastic belt. If you are working with a polyester belt, see *Adjusting Tension on a Staging Conveyor Polyester Belt (Earlier Models)*.

Figure 6-8: Staging Conveyor Belt Type

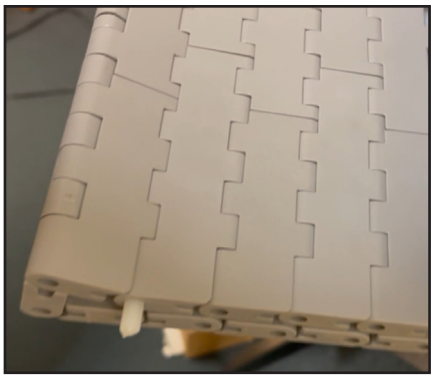

Plastic Belt (Latest Models)

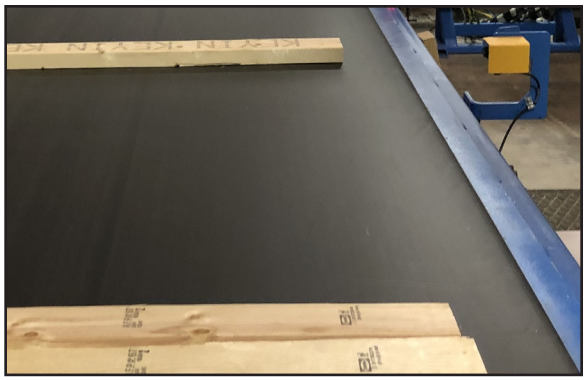

Polyester Belt (Earlier Models)

The tension in the belt should be loose, allowing for a certain amount of catenary sag underneath the conveyor. See Figure 6-9 for the correct amount of slack.

Figure 6-9: Recommended Catenary Sag for Staging Conveyor

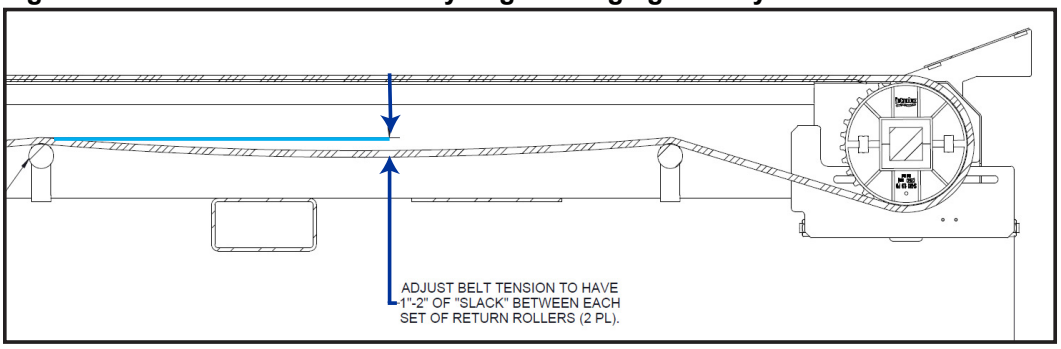

Belt rows can be removed to adjust the take-up to achieve proper catenary sag for belt tension.

1. In the conveyor section you wish to remove, locate the blue tabs on either inside edge, referred to as a *Slidelox*®.
2. Release the *Slidelox* on both sides of the belt by using a screw driver to slide them to the left. This will expose the rod.

Figure 6-10: *Slidelox* Release Mechanism

3. Use an extra rod or the screwdriver to push and remove the rod out of the belt.

Figure 6-11: Removing the Rod from the Belt

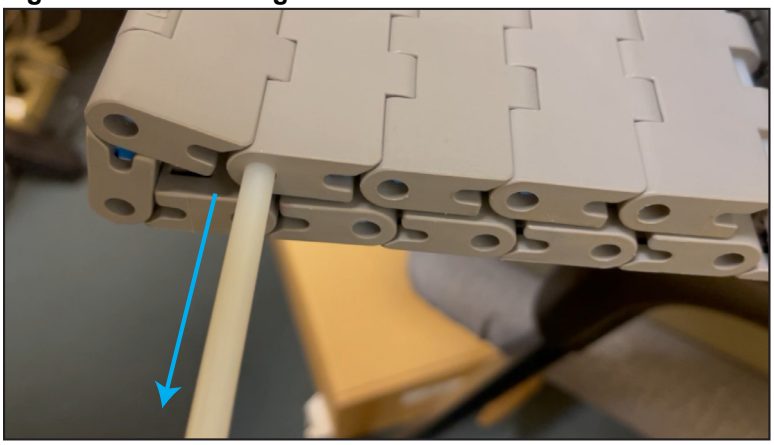

4. Remove sections of the belt to reach the desired length.
5. Once the belt is shortened, re-insert the rod and move the *Slidelox* back to the locked position using a screwdriver.

Adjusting Tension on a Staging Conveyor Polyester Belt (Earlier Models)

Socket wrench set

Combination wrench set

See *Adjusting Drive Chain Tension on a Staging Conveyor* for the tensioning instructions for the plastic belt type (latest models).

The staging conveyor belt adjusts using threaded rods that control the position of take-up slide blocks that position the rollers. Adjust the belt tension by using the following steps:

1. Lockout / tagout on main electrical enclosure and the filter / regulator.
2. Locate the take-up housings that support the take-up slide blocks. The housings are at the opposite end of the belt from the gearmotor. See Figure 6-12.

Figure 6-12: Take-Up Housing Location

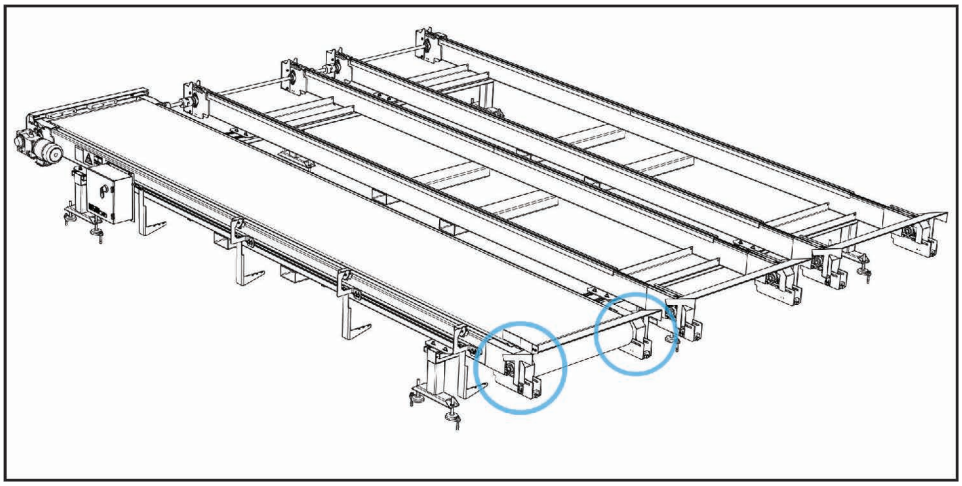

Use this procedure to adjust belt tension only. See page 35 for the belt tracking procedure.

3. Adjust the take-up slide blocks by using the following steps.

   a) Loosen the four bolts that fasten the take-up slide block to the take-up housing. Two of the bolts are highlighted in red in Figure 6-13. The other two bolts are located on the opposite side of the take-up housing.
      Do not remove the bolts.

Figure 6-13: Take-Up Housing

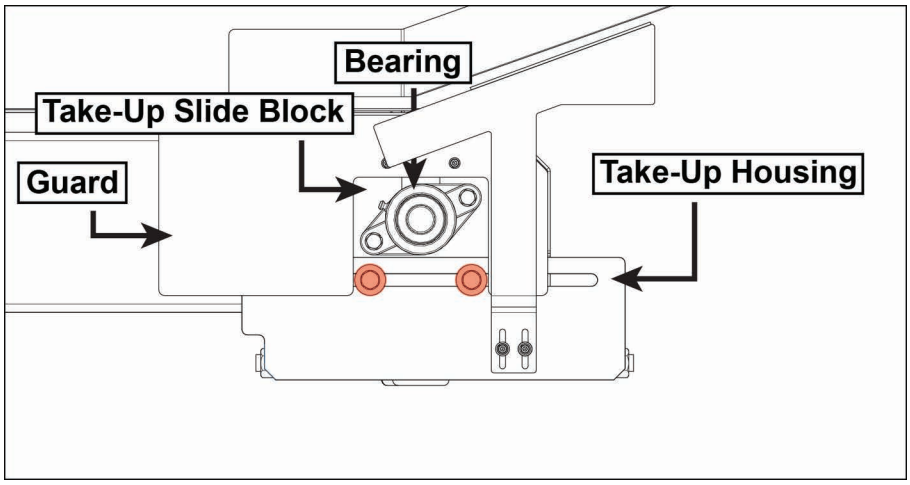

   b) Repeat step a with the bolts on the other take-up slide block on the opposite side of the conveyor.

   c) Use a socket wrench to turn the nut on a threaded rod to adjust the position of that take-up slide block. Adjust the position in 1/4" increments or less. Move to the other take-up slide block. Adjust that take-up slide block equally.

      - If the belt has 3" of play when lifted upward from its center, it is tensioned correctly. Continue to step d.
      - If the belt has too much or too little play, continue to adjust until you reach the correct amount of tension. Then continue to step d.

Figure 6-14: Tension Adjustment Direction

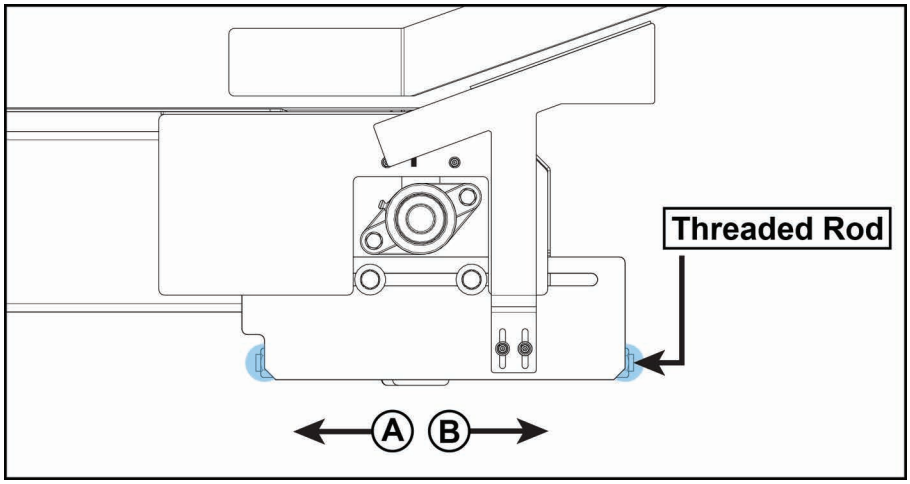

Moving the take-up slide block in direction A decreases tension.

Moving the take-up slide block in direction B increases tension.

d) Tighten the four bolts that fasten the take-up slide block to the take-up housing.

e) Repeat step d with the four bolts on the other take-up slide block.

4. Remove the lock and tag. Restore power and pneumatic pressure to the *CDS*.
5. Check the belt tracking.
   - If the belt tracks properly, resume operation.
   - If the belt does not track properly, see page 35 to align it.

Tracking the Staging Conveyor Polyester Belt (Earlier Models)

Allen wrench set

Socket wrench and sockets

The belt of the staging conveyor should track straight down the middle of the conveyor belt bed. The belt should not touch or rub the staging conveyor frame or guards. If the belt touches or rubs the frame or guards, track the belt using the following steps:

1. Lockout / tagout on the pneumatic system.
2. Check the conveyor to make sure all of the following conditions are met.
   - The idler and drive rollers should be parallel to each other and perpendicular to the frame.
   - The frame should be level across its width.
   - The belt should be tensioned according to the specifications in step c on page 34.

3. If these conditions are met, run the conveyor at medium speed.

	⚠ CAUTION
	Do NOT touch the conveyor belt or the rollers while the conveyor belt is running. **Touching the conveyor belt or roller while the belt is running may result in injury from crushing or pinching.**

See page 17 to operate the conveyor at medium speed.

4. Prepare the belt for tracking by using the following steps:

   a) Go to the adjustable return roller under the belt near the outfeed end of the conveyor. Locate the bolts that hold the return roller take-up brackets in place. See Figure 6-15 for bolt locations.

      - If the bolts are as far from the middle of the belt as possible, skip to step 5.
      - If they are not, continue to step b.

   Figure 6-15: Take-Up Bracket Bolt Locations (Bottom View)

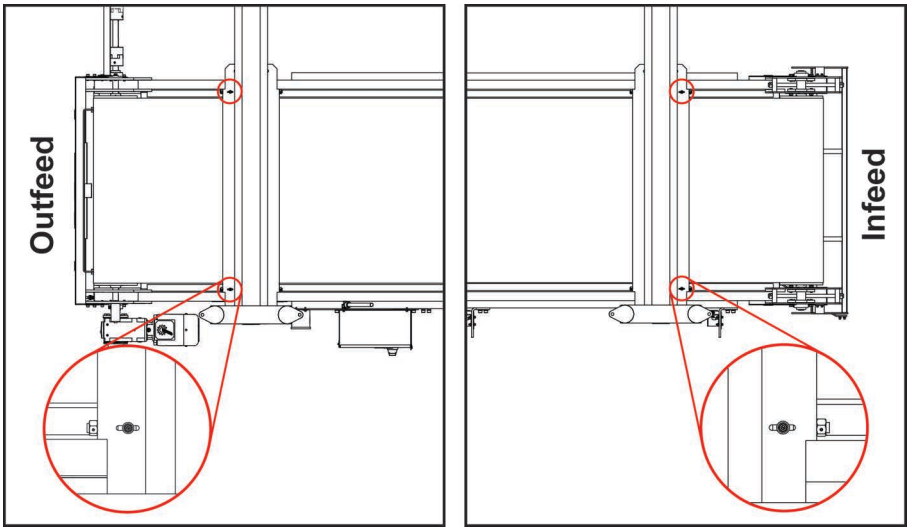

   b) Loosen but do not remove the bolts.

   c) Adjust the take-up brackets so that both bolts are as far from the middle of the belt as possible.

   d) Tighten the bolts to keep the take-up brackets in place.

5. Track the belt by using the following steps.

   a) Go the adjustable return roller under the belt on the infeed end of the conveyor. Locate the bolts that hold the return roller take-up brackets in their places. See Figure 6-15 for bolt locations.

      - If the bolts are as far from the middle of the belt as possible, skip to step b.
      - If they are not, loosen the bolts and adjust the take-up brackets so that both bolts are as far from the center of the belt as possible. Do not retighten them yet.

b) Depending on the orientation of your staging conveyor, use Figure 6-16 or Figure 6-17 to track the belt.

Assume in the following graphics that the BLADE saw is positioned closest to side 2.

- Adjust the return roller in 1/16" increments or less.
- Allow the conveyor to run for ten minutes between adjustments.
- If you overadjust the return roller, simply undo some of the adjustment. Do not adjust the opposite side of the return roller. Do not adjust the return roller on the outfeed side.

Figure 6-16: Belt Tracking for Staging Conveyor Orientation A (Top View)

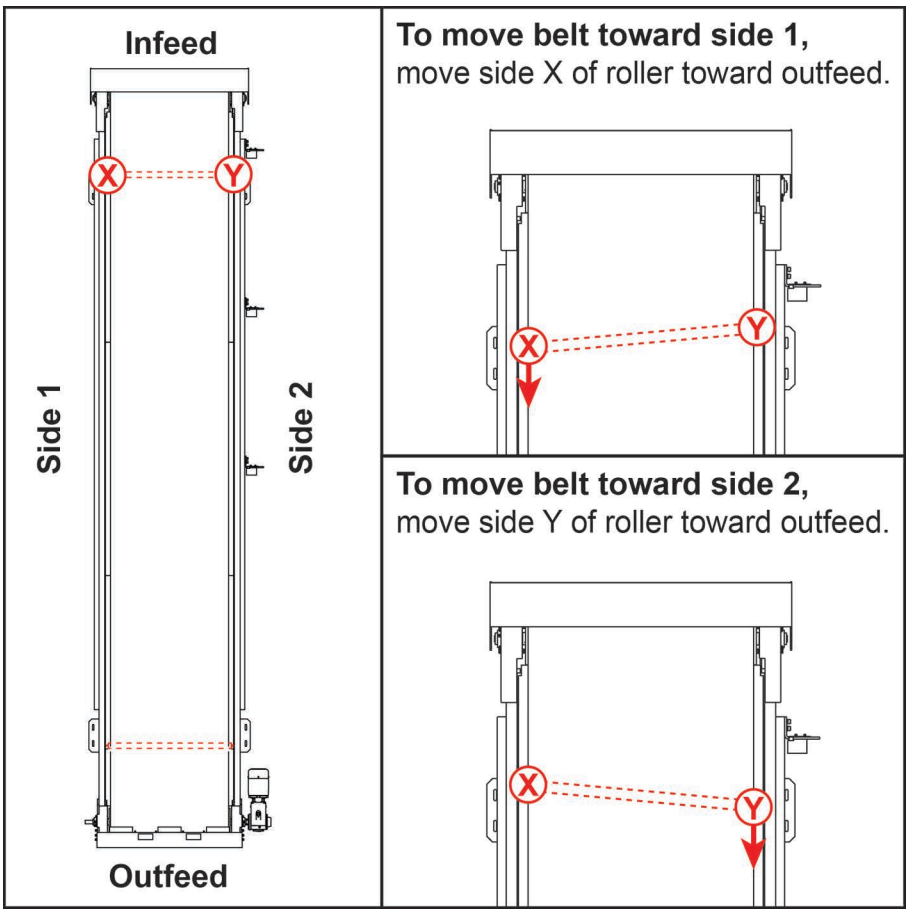

Roller angle above exaggerated for clarity

Figure 6-17: Belt Tracking for Staging Conveyor Orientation B (Top View)

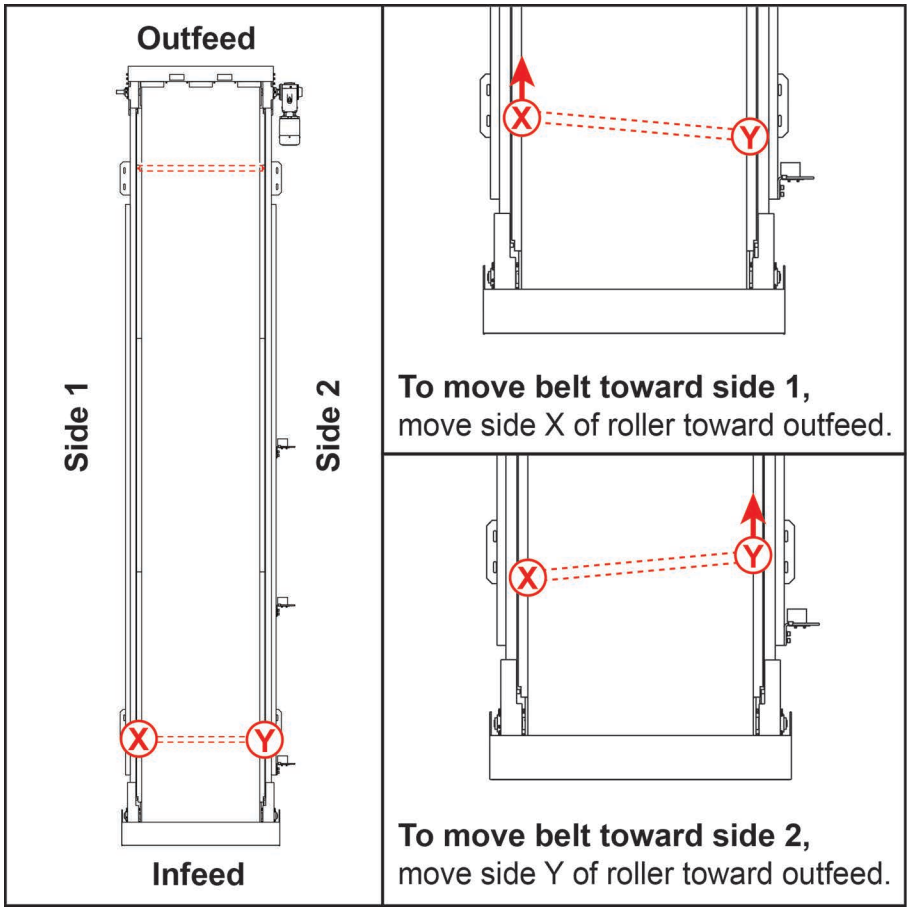

Roller angle above exaggerated for clarity

c) When the belt tracks properly, tighten the bolts that hold the return roller take-up brackets.

6. Remove the lock and tag from the pneumatic system.
7. Resume operation.

Adjusting Tension on a Transfer, Push, or Sort Conveyor Belt

Combination wrench set

The transfer, push, and sort conveyors use bolts to adjust bearing plates that position the shafts. The shaft position determines the amount of belt tension. See step 3c on page 40 to determine the correct amount of tension. If necessary, adjust the belt tension by using the following steps.

1. Lockout / tagout on the main electrical enclosure and the filter / regulator.
2. Locate the bearing plate and bearings on the opposite end of the conveyor from the gearmotor and conveyor electrical enclosure.

Figure 6-18: Bearing Plate Location

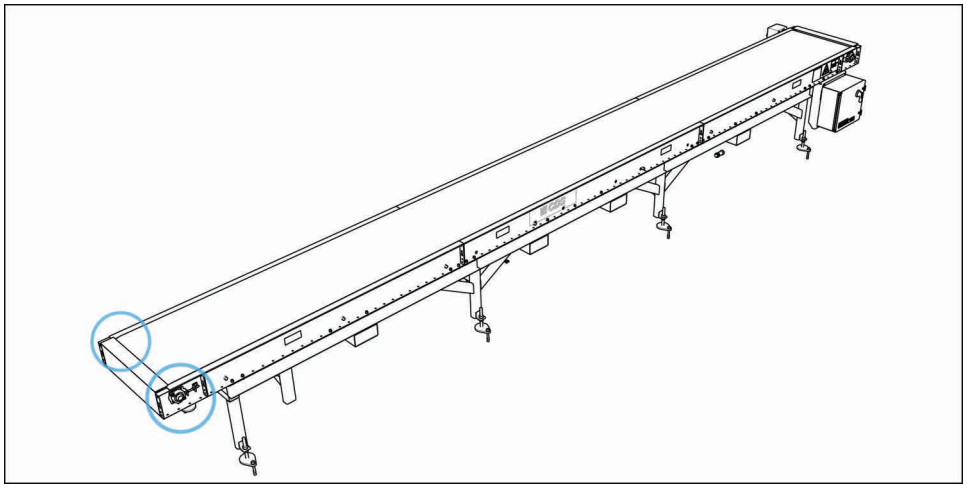

3. Adjust one bearing plate by using the following steps.
   a) Loosen the nuts that hold the bearing plate in place. Do not remove the nuts. The nuts are highlighted in red in Figure 6-19.
   b) Locate the bolt between the bearing plate and the angle bracket. See Figure 6-19.

Figure 6-19: Bearing Plate and Angle Bracket Location

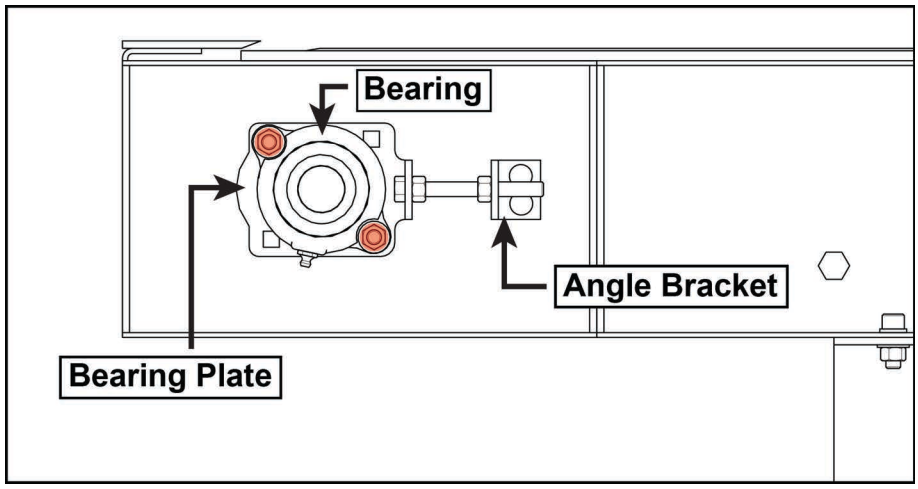

c) Use a wrench on the nut highlighted in blue in Figure 6-20 to adjust the belt tension. Adjust the bearing plate in 1/4" increments or less. Move the bearing plate in direction A (shown in Figure 6-20) to increase tension. Move the bearing plate in direction B to decrease tension.

- Count each turn while adjusting.
- The belt tension should be adjusted so that the belt does not sag beneath the bottom of the conveyor frame.

Figure 6-20: Belt Tension Adjustment Nut

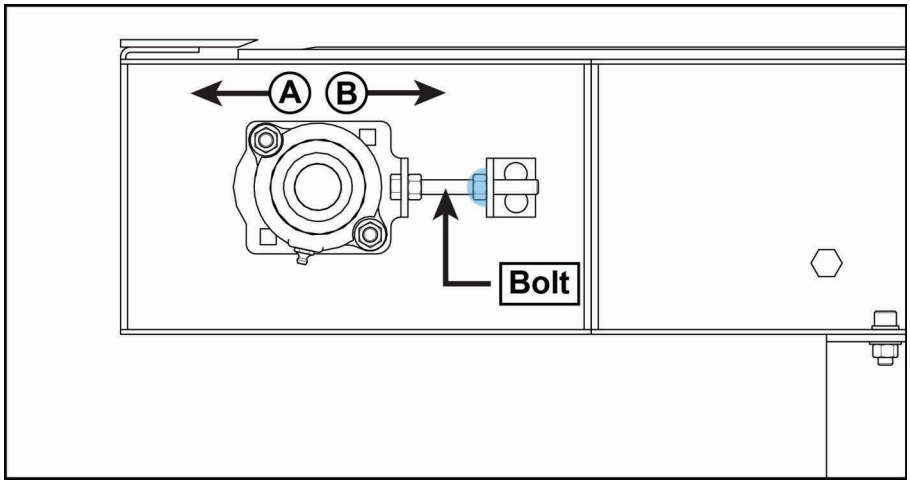

d) Tighten the nuts that hold the bearing plate in place.

e) After adjusting one bearing plate, adjust the bearing plate on the other side of the conveyor an equal amount.

4. Remove the locks and tags. Restore electricity and pneumatic pressure to the *CDS*.

5. Resume operation.

Pneumatic System

Pneumatic Assembly with Filter / Regulator

To set pressure on the filter / regulator, see page 42.

The *CDS* uses a pneumatic assembly containing a filter / regulator to supply air to the push and sort conveyors at a consistent pressure. Incoming air passes through the lockout valve into the filter / regulator, through a slow-start valve, and then to the cylinders. Figure 6-21 shows the pneumatic assembly.

Figure 6-21: Parts of the Pneumatic Assembly

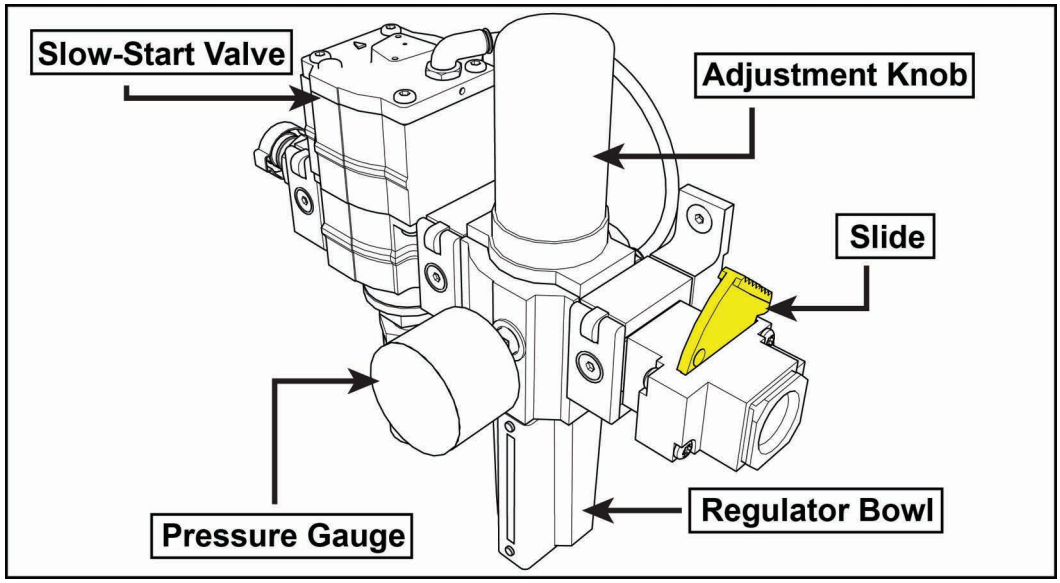

Removing Discharge of the Filter / Regulator

Condensation may form in the pneumatic lines due to changes in temperature. To remove this condensation from the pneumatic lines, the *CDS* utilizes an automatic drain on the filter/regulator.

	⚠ CAUTION
	Use a container to prevent water discharged from the filter / regulator from condensing on the floor. **Water condensed on the floor may create slick conditions that result in injury.**

A container must be placed under the filter / regulator and emptied when it fills. Instead of using a container, you may connect the filter / regulator to a drain using a soft hose.

Adjusting the Pressure on the Filter / Regulator

The pressure adjustment knob on the filter / regulator controls the operating pressure for the entire pneumatic system. The operating pressure for the pneumatic system should be set to 100 psi. Use the following procedure to adjust operating pressure.

1. Pull the pressure adjustment knob up to unlock it. See Figure 6-21 on page 41 for the location of the knob.
2. Turn the knob to adjust the pressure.
   - To increase pressure, turn the knob clockwise until the pressure is slightly higher than 100 psi. Then turn the knob counterclockwise to lower the pressure to 100 psi.
   - Turn the knob counterclockwise to lower pressure to 100 psi.
3. Once the gauge reads 100 psi, push the knob down to lock it into place.

Replacing a Filter Element on a Filter / Regulator

The regulator uses a 40-micron filter that must be replaced every six months (one shift) or three months (two shifts). This filter can be purchased through MiTek. Refer to the *Parts List* appendix on page 55 for the part number.

Use the following procedure to replace a filter element.

1. Remove pressure from the lines by using the procedure on page xv.
2. Remove the bowl on the regulator body by twisting approximately 1/4 turn clockwise while pushing up on the bowl. Then pull down and remove the bowl from the body.
3. Unscrew the white plastic baffle holding the filter element and remove it from the regulator.

   Figure 6-22: Regulator Filter Element

   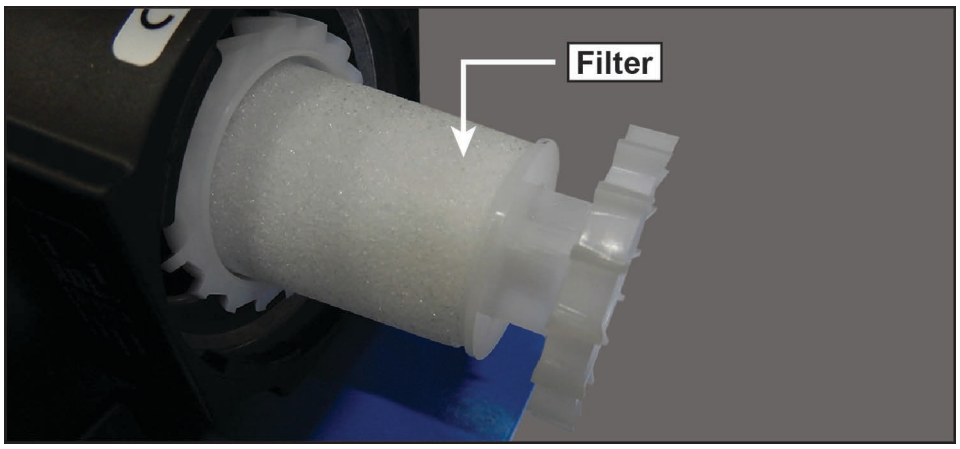

4. Replace the filter element. Screw the white plastic baffle back into place.
5. Place the bowl back onto the regulator body by pushing up and turning counterclockwise. Make sure it is secure before returning pressure to the lines.

Adjusting Flow Control Valves

The cylinders on the push conveyor and sort conveyor have flow control valves. These flow control valves to adjust how fast the cylinders extend and retract.

	NOTICE
	The flow control valve positions are set by MiTek. The valves do not need adjustment under normal operating conditions. **However, valves may need adjustment if parts are replaced in the cylinder assembly. Adjust the valves only under this circumstance.**

- If the cylinders are moving too quickly or slowly, first check the filter / regulator to make sure the pressure is adjusted properly (see page 42).
- Then, adjust the flow control valves. Make sure to time the pusher so that so that part doesn't hit the frame or miss the conveyor when pushed.

The location of the flow control valve that needs adjustment depends on whether the cylinder is moving too quickly on the extending or retracting stroke.

Table 6-3: Flow Control Valve Adjustment

Stroke	Valve Location	Increase Speed	Decrease Speed
Extend	Rod end of cylinder	Turn the adjusting knob counterclockwise	Turn the adjusting knob clockwise
Retract	Cap end of cylinder	Turn the adjusting knob counterclockwise	Turn the adjusting knob clockwise

Figure 6-23: Rod-End and Cap-End Flow Control Valves

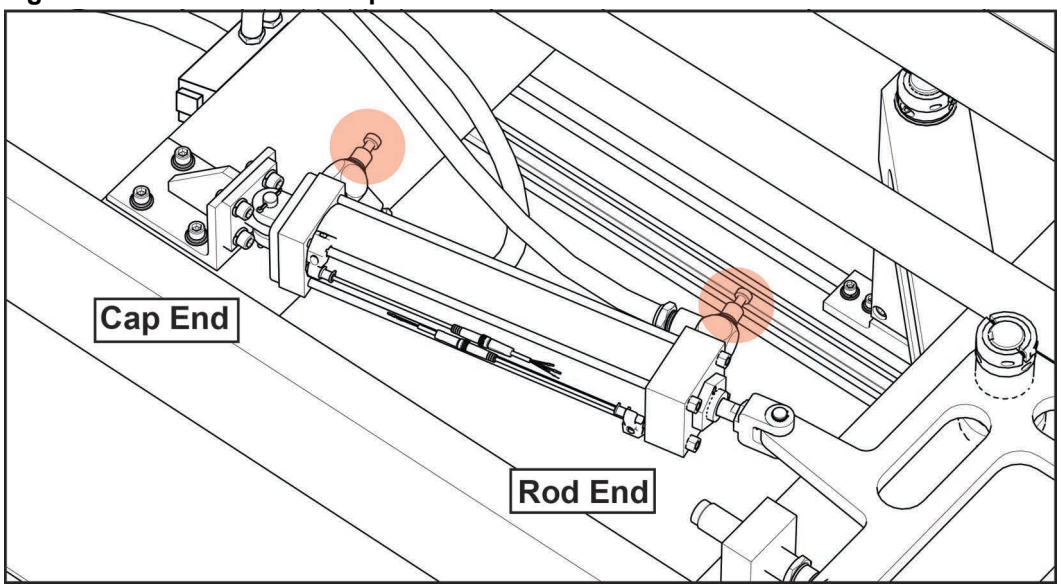

View from top with guards removed

Electrical System

Electrical Enclosures

Cleaning Inside Electrical Enclosures

	NOTICE
	Never use compressed air inside of electrical enclosures. Compressed air may force contaminants into electrical connections. **Use a vacuum to remove dust from electrical enclosures. Canned air is acceptable after vacuuming.**

Over time, sawdust may accumulate inside of the electrical enclosures of the *CDS*. Use a vacuum to remove sawdust from each electrical enclosure. Removing sawdust helps prevent problems with electrical components.

VFDs (Variable Frequency Drives)

The *CDS* uses variable frequency drives to control conveyor motion. Each conveyor has a VFD located inside of its electrical enclosure. See Figure 6-24. If one of these VFDs experiences a fault, the conveyors stop moving.

Verifying the voltage in and out of each VFD is always a good first step in the electrical troubleshooting process.

For help troubleshooting VFD faults, call MiTek Machinery Division Customer Service.

Figure 6-24: VFD in Conveyor Electrical Enclosure

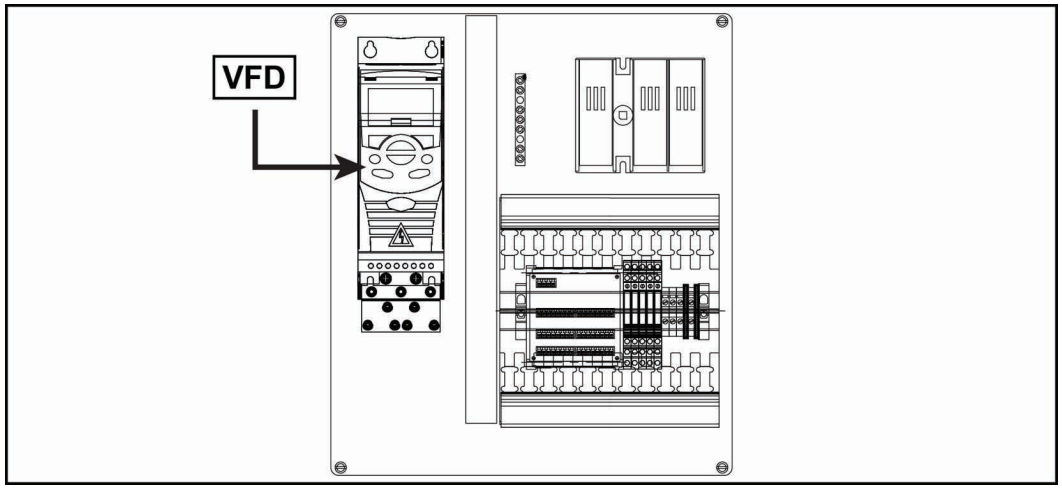

PLC (Programmable Logic Controller)

The *CDS* uses a PLC to operate the conveyors and coordinate their movements. The PLC is installed on a rack inside of the main electrical enclosure. See Figure 6-25 for its location.

Figure 6-25: PLC in Main Electrical Enclosure

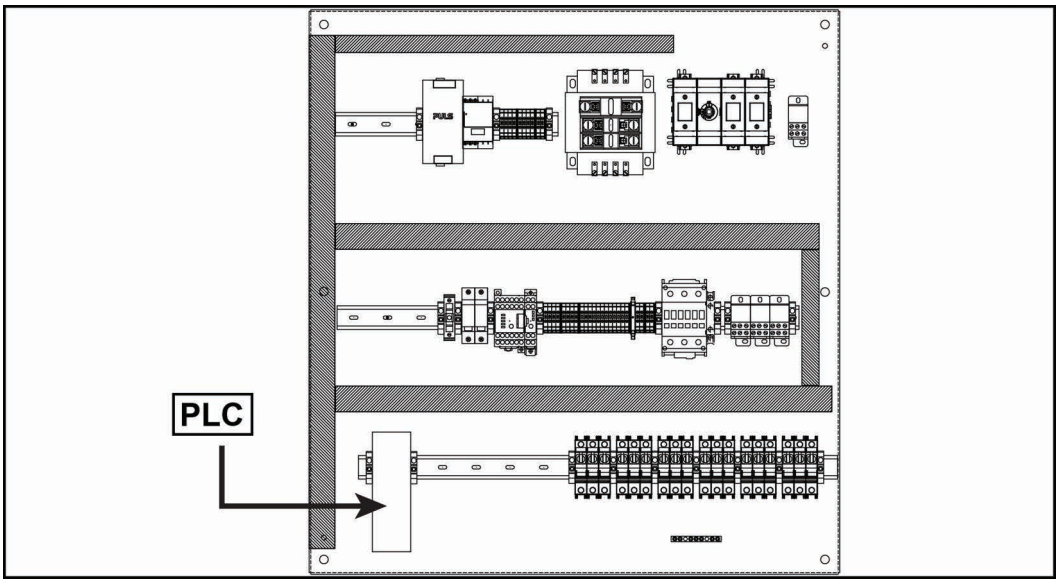

Light Grid Bars

The light grid bars are located on the infeed side of the push and sort conveyors. The light grid bars have two indicators. See Table 6-4 for explanations of the indicators. See Figure 6-26 for the location of the indicators, circled in red.

See page 5 for the location of the light grid bars on the push conveyors.

Table 6-4: Light Grid Bar Operating States

Light	Indicator	Description
Green	Power	Illuminates when the light grid has power
Orange	Output	Illuminates when a part moves through the grid field

Figure 6-26: Indicator Location

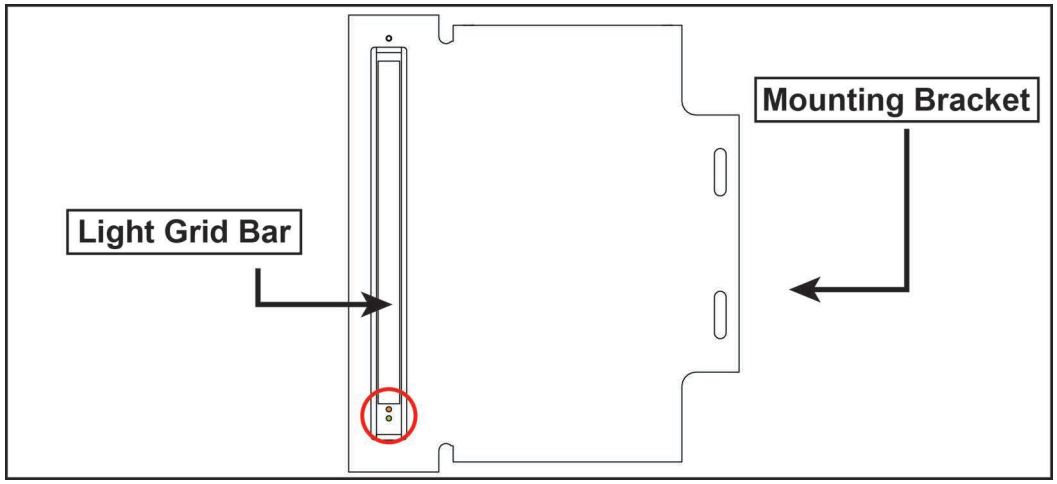

NOTICE

Only parts moving down the conveyors should interrupt the light grid. Do not interrupt the light grid in any other way.

Interference with the light grid may direct parts to the wrong destination.

Cleaning Light Grid Bars

The push and sort conveyors use light grid bars to time the action of their pusher arms. Dust or other contaminants may build on the light grid bars.

	NOTICE
	Do NOT use acetone or other harsh chemicals to clean the light grid bars. Do NOT use high pressure to clean the light grid bars. **Using harsh chemicals or high pressure to clean light grid bars may result in equipment damage.**

Lightly spray the surface of the light grid bar with a common glass / plastic cleaner. Wipe the surface of the light grid bar with a soft cloth.

Gearmotors

Changing the Rotation of a Gearmotor

All gearmotors are 3-phase motors. If a gearmotor is rotating in the wrong direction, lock-out/tagout on the main electrical enclosure of the *CDS*. Swap any 2 of the 3-phase wires inside of the junction box on the gearmotor.

Sensors

Overview of Sensors

A complete list of sensors is found in Table 6-5. Photos are shown on subsequent pages.

Table 6-5: Overview of Sensors

Sensor Name	Description
Board Present Sensor	Detects lumber at the end of the staging conveyor belt.
Partially-Full Sensor	Detects lumber at the midpoint of the staging conveyor belt.
Full Sensor	Detects lumber at the beginning (feed side) of the staging conveyor belt.
Reverse Sensor	The reverse sensor detects operator movement in an area near the end of the staging conveyor belt.
Motion Sensor (Earlier Models)	The motion sensor detects operator movement in an area near the end of the staging conveyor belt.

Cleaning Sensors

The sensor windows should be cleaned on a monthly basis. It is recommended that the window be cleaned using a common glass/plastic cleaner. The window should be sprayed and wiped down with a soft cloth to prevent damage to the surface. Do NOT use benzene, acetone, or a thinner as it will damage the surface.

Staging Conveyor Sensors

The staging conveyor board sensors have a green and a yellow LED. The green LED indicates the sensor has power. The yellow LED indicates the sensor is detecting an object on the conveyor. Follow the procedure below to adjust the boards sensors.

1. Verify the sensors have power, and the green LED on top of the sensor is lit.
2. Place a scrap 2x4 in line with the sensor and approximately 2½" from the edge of the sensor side of the belt. See Figure 6-27.

Figure 6-27: Sensor Test Layout

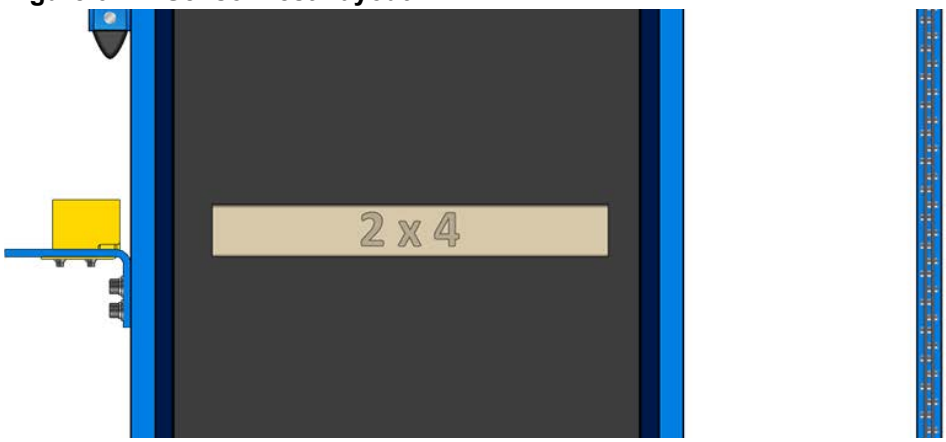

3. Loosen the screws, and adjust the height of the sensor until the yellow LED illuminates. See Figure 6-28.

Figure 6-28: Sensor Height

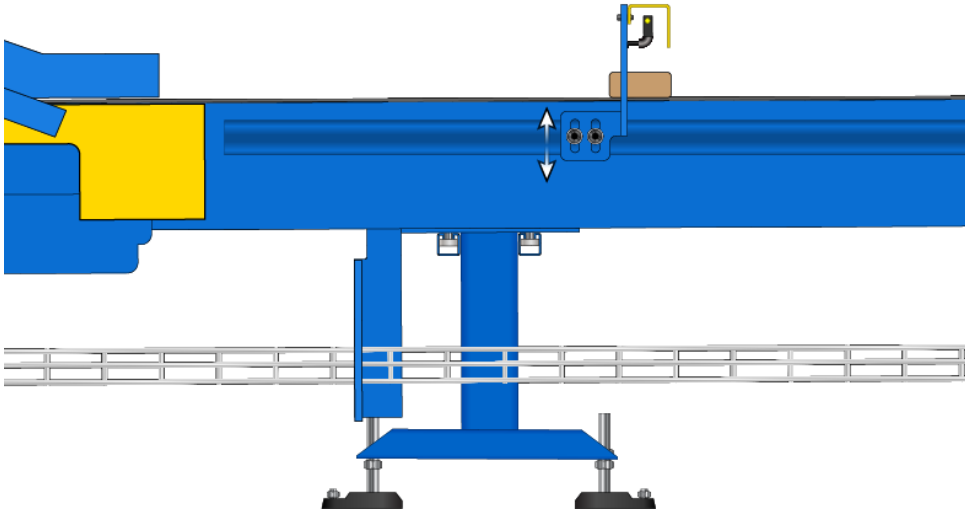

4. Tighten the adjustment screws to secure the sensor in place.
5. Remove board to test if the Yellow LED turns off. If the LED remains on, readjust sensors.
6. Repeat for the remaining two board sensors.

Reverse Sensor

The reverse sensor is, by default, oriented according to the configuration of your push conveyor (trailing-edge or leading-edge).

If a new orientation is required, you can remove the 2 bolts securing the sensor and reuse the same bracket and bolts.

Figure 6-29: Reverse Sensor Bracket

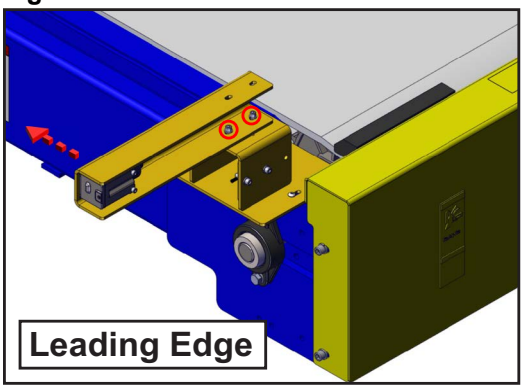

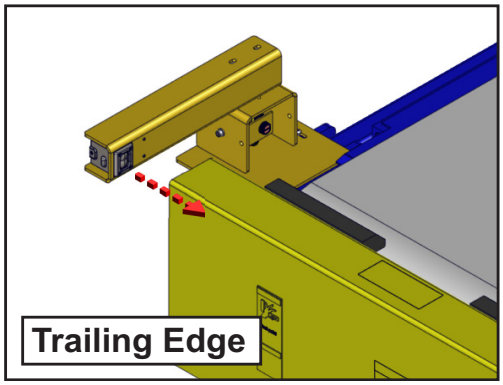

Motion Sensor (earlier models)

The motion sensor should be positioned so that it detects a person moving toward the sensor in the approximate area shown in red that extends approximately 1 ft beyond the end of the conveyor (Figure 6-30).Use the following procedures to correctly position the motion sensor.

Figure 6-30: Default Motion Sensor

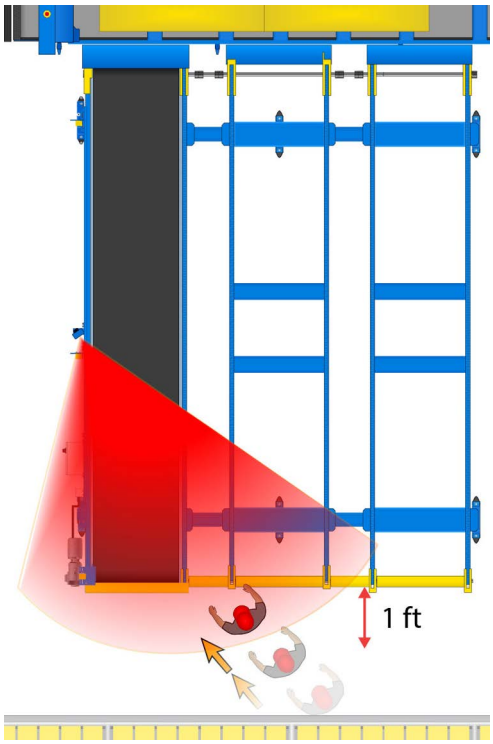

Direction Adjustment

1. Adjust the lower metal bracket (raise or lower) and the upper metal bracket (rotate) to point the sensor in the desired direction.

Figure 6-31: Motion Sensor Bracket Range of Movement

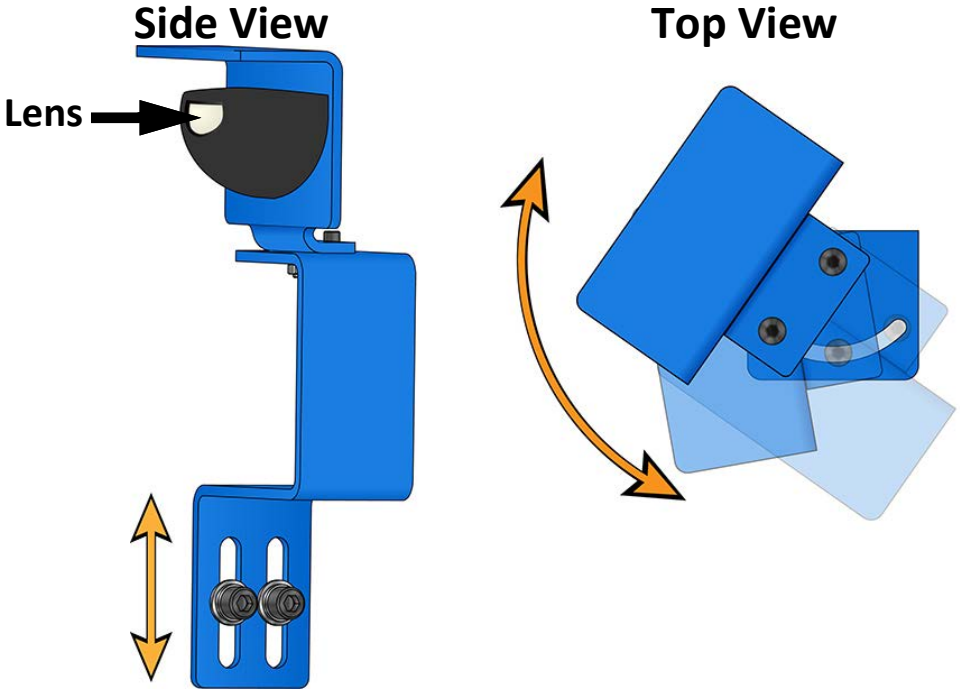

2. Remove the cover to make finer adjustments. Insert a small, flat-blade screwdriver into the notch at the bottom of the cover, and gently pry outward to separate the bottom of the cover from the mounting flange. Using excessive force may damage the circuit board housed behind the cover.

Figure 6-32: Sensor Cover Removal

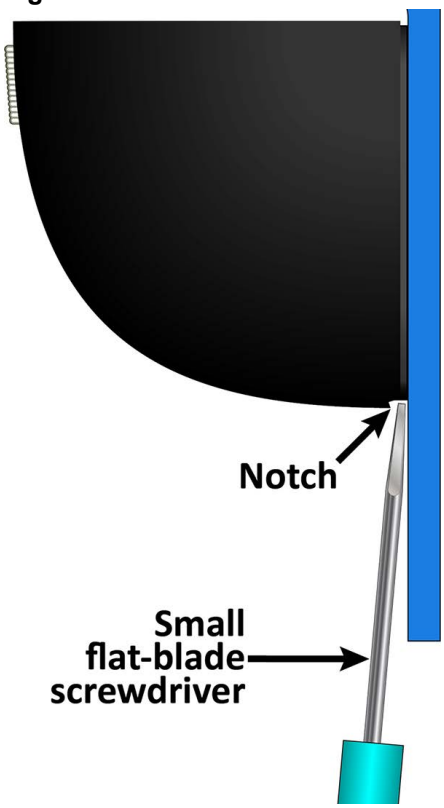

3. With the cover removed, the internal circuit board may be pivoted up or down in 10° increments. Orient the circuit board and attached sensor in the desired direction.

Figure 6-33: Sensor PCB Orientation

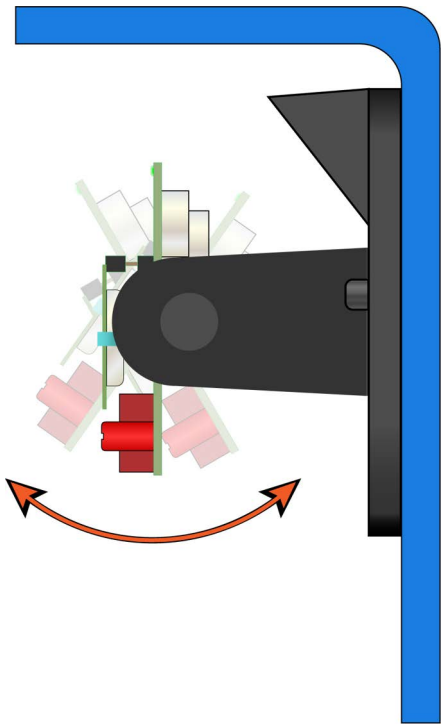

Electrical Adjustments and Indicators

The sensor board includes two LEDs, a dial used to set the range or coverage area, and a Dual In-line Package (DIP) switch. Follow the below procedure to correctly calibrate the sensor.

Figure 6-34: Sensor Board Layout

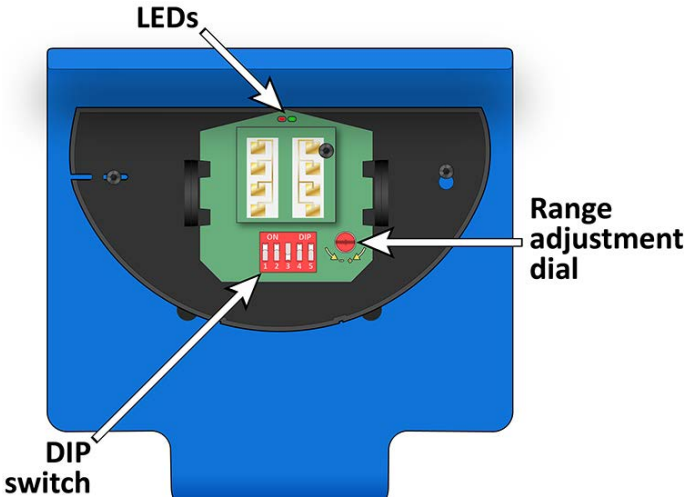

Range Dial

1. Use a flat-blade screwdriver to turn the range dial counter-clockwise.
   - Turning the dial counter-clockwise decreases the range/motion detection area.
   - Turning the dial clockwise increases the range/motion detection area.

Figure 6-35: Adjusting Range Dial

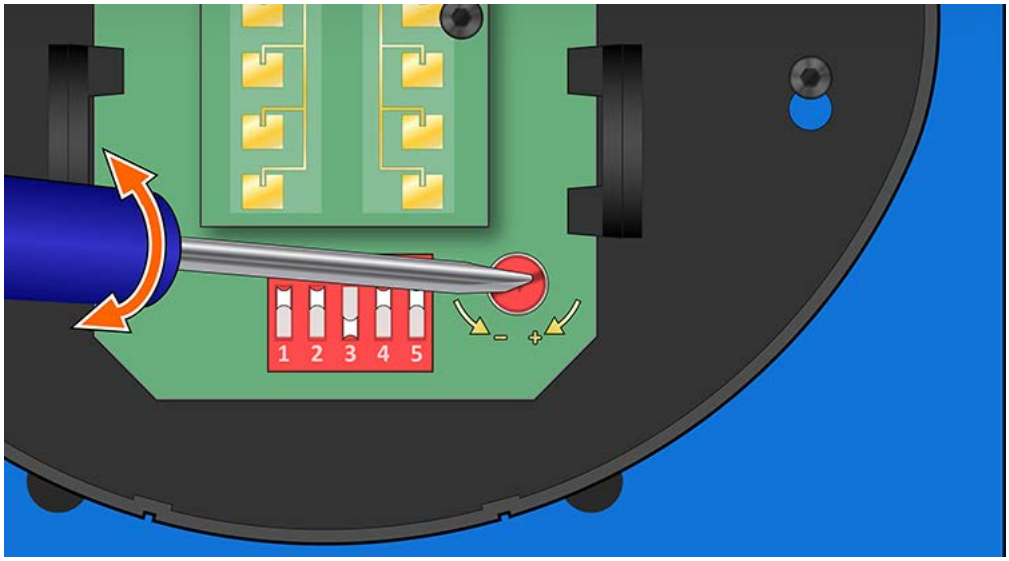

2. Begin rotating the range dial clockwise while an operator approaches the staging conveyor belt as seen in Figure 6-30.
3. Adjust the dial clockwise until the red LED activates when the operator approaches the conveyor in the designated area.
   - The **green** LED indicates that the motion detector has power and is in a ready state.
   - The red LED indicates the motion detector is sensing motion.
4. Verify the DIP switch is configured as shown below.

Figure 6-36: Correct DIP Switch Configuration

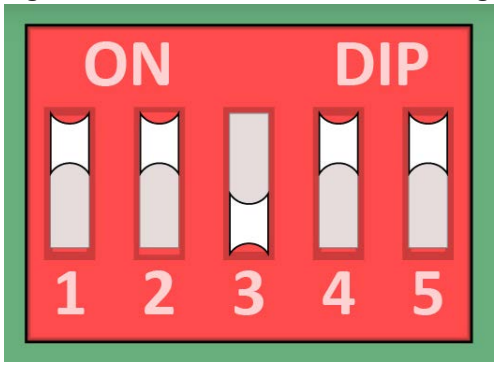

Parts List

Purpose of Appendix This appendix lists MiTek replacement part numbers for your *CDS*.

Using the Parts List Appendix

The parts list provided here shows spare parts that you may need to repair or maintain your *CDS*. Use one of the methods below to order them.

Table A-1: Ordering Parts with a Part Number

By E-mail	By Phone
Send an e-mail to mitekparts@mii.com with relevant information, including the part number.	Call 1-800-523-3380. Select “parts orders.”

Safety Notes for Replacement Parts

NOTICE

Use only parts purchased from MiTek to replace parts on your *CDS*.

Parts from other sources may damage your *CDS*.

⚠ WARNING

ELECTRICAL HAZARD.

All electrical work must be performed by a licensed electrician.

Follow approved lockout/tagout procedures (OSHA 29 CFR 1910.147)

⚠ WARNING

ELECTROCUTION AND HIGH PRESSURE HAZARDS.

Always activate an E-stop when the machine is not operating.

Always verify that all power to the machine is off and followed approved lockout/tagout procedures (OSHA 29 CFR 1910.147) before performing any maintenance.

Bleed pneumatic lines if appropriate.

Part Numbers

Table A-2: Mechanical Parts

Part Location	MiTek Part Number	Description	Drawing Number	Keep in Stock
Transfer, push, sort conveyor	192356	Belt (specify length)	Multiple	
Transfer, push, sort conveyor	192362	Belt rod	Multiple	
Transfer, push, sort conveyor	192375	Sprocket	Multiple	
Transfer, push, sort conveyor	480488	Gearmotor (1.5 hp)	Multiple	
Transfer, push, sort conveyor	591104	Drive shaft	Multiple	
Transfer, push, sort conveyor	591105	Idler shaft	Multiple	
Transfer, push, sort conveyor	532057	Bearing	Multiple	
Transfer, push, sort conveyor	591103	Return roller	Multiple	
Push and sort conveyor	477012	Shock absorber	89900-501	
Staging conveyor	554552-531.00	Drive chain	89863-501	
Staging conveyor	89869	Drive chain wearstrip	89868-501	
Staging conveyor	535245	Drive chain sprocket	89865-501	
Staging conveyor	419134	Flange bearing	89824-50X 89863-501	
Staging conveyor	480487	Gearmotor (2.0 hp)	89824-50X	
Staging conveyor	589121	Belt	89824-50X	
Staging conveyor	89836-501	Drive roller assembly	89824-50X	
Staging conveyor	89841-501	Idler roller assembly	89824-50X	
Staging conveyor	89840	Drive roller shaft only	89836-501	
Staging conveyor	89842	Idler roller shaft only	89841-501	
Staging conveyor	592006	Return roller	89824-50X	

Table A-3: Pneumatic Parts

Part Location	MiTek Part Number	Description	Drawing Number	Keep in Stock
Filter / regulator assembly	89930-501	Filter / regulator assembly	89930-501	
Filter / regulator assembly	438559	Filter / regulator only	89930-501	
Filter / regulator assembly	438588	Slow-start valve only	89930-501	
Filter / regulator assembly	430051	Shutoff valve only	89930-501	
Filter / regulator assembly	438014	Muffler only	89930-501	
Push and sort conveyor	89928-501	Cylinder assembly	89928-501	
Push and sort conveyor	423063	Cylinder only	89928-501	
Push and sort conveyor	424528	Flow control valve	89928-501	
Push and sort conveyor	89929-501	Valve assembly	89929-501	
Push and sort conveyor	438793	Muffler	89929-501	
Push and sort conveyor	434598	Valve only	89929-501	

Table A-4: Electrical Parts

Part Location	MiTek Part Number	Description	Drawing Number	Keep in Stock
All enclosures	509438	Disconnect switch handle	Multiple	
All enclosures	509495	Disconnect switch shaft	Multiple	
All enclosures	528103	E-stop pushbutton assembly	Multiple	
Main enclosure	509144	24VDC 10A power supply	90636-502	
Main enclosure	509178	24VDC 2.5A power supply	90636-502	
Main enclosure	92281-506	PLC (programmed)	90636-502	
Main enclosure	528104	Safety relay	90636-502	
Main enclosure	528130	Safety relay expansion pack	90636-502	
Main enclosure	509223	48A motor starter	90636-502	
Main enclosure	514192	24V control relay	90636-502	
Main enclosure	509429	60A fused disconnect switch	90636-502	
Main enclosure	516350	Class-CC 6A fuse	90636-502	1
Main enclosure	516388	Class-CC 3A fuse	90636-502	2
Main enclosure	516389	Class-CC 4A fuse	90636-502	1
Main enclosure	516543	Class-CC 10A fuse	90636-502	1
Main enclosure	516495	Class-CC 45A fuse	90636-502	3
Main enclosure	516541	2A time-delay fuse	90636-502	1
Main enclosure	516352	Class-CC 15A fuse	90636-502	6
Conveyor enclosure	509290	VFD keypad	90636-502	
Conveyor enclosure	509455	30A fused disconnect switch	90636-502	
Conveyor enclosure	516488	10A fuse	90636-502	3
Conveyor enclosure	92285-503	ACS355 VFD (programmed) (push)	—	
Conveyor enclosure	92285-504	ACS355 VFD (programmed) (sort)	—	
Conveyor enclosure	92285-505	ACS355 VFD (programmed) (staging)	—	
Conveyor enclosure	92285-506	ACS355 VFD (programmed) (transfer)	—	
Push and sort conveyor	423483	Reed switch for cylinder	89928-501	
Push and sort conveyor	508044	Light grid bars (pair)	89900-501 89760-501	
Staging conveyor	515753	Sensor	89824-501	
Staging conveyor	515947	Proximity switch	89824-501	
Staging conveyor	92246	Tablet HMI (programmed)	90637-501	

Table A-5: Documentation Parts

Documentation	MiTek Part Number
Manual	001060
Labels	See page 57

Table A-6: Restricted Zone Tape Part Numbers

Mitek Part Number	Part Description	Yards of Tape
SB181KIT-A	Service bulletin and restricted-zone tape (one roll)	100
SB181KIT-B	Service bulletin and restricted-zone tape (two rolls)	200
SB181KIT-C	Service bulletin and restricted-zone tape (three rolls)	300
SB181KIT-D	Service bulletin and restricted-zone tape (four rolls)	400

Label Part Numbers

Number	Label
691506	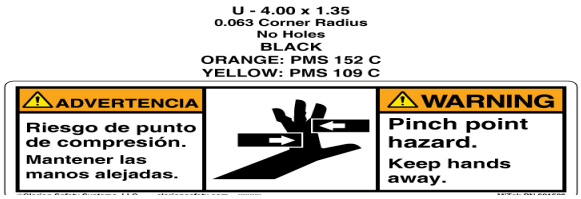
691513	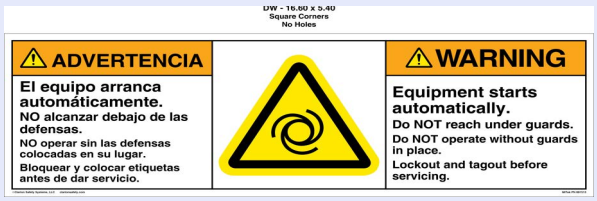
691516	

Maintenance Checklist

Purpose of Appendix

This appendix consists of checklists to plan and record preventative maintenance procedures.

Using the Maintenance Checklists

Copy these checklists and place the copies with the *CDS*. Leave the original checklists in this manual for future use.

Checklist	Page
Daily checklist	59
Weekly checklist	60
Monthly checklist	61

Safety Notes for the Maintenance Checklists

	⚠ WARNING
	CRUSH HAZARD. **Perform the safety tests described on page page xvi before operating the machine after performing maintenance or repairs.**

	⚠ WARNING
 	ELECTROCUTION AND HIGH PRESSURE HAZARDS. **Always turn the power off by activating an E-stop when the machine is not operating.** **Always verify that all power to the machine is off and followed approved lockout/tagout procedures (OSHA 29 CFR 1910.147) before performing any maintenance.** **Turn off the shutoff valve. Bleed pneumatic lines.**

Daily Checklist

Month and year _____

Week of _____

	⚠ WARNING
	Lockout/tagout before performing maintenance. **If power is required, make sure all non-maintenance personnel are clear of the restricted zone.**

Action	Shift	Page	Initials / Date					
Perform safety test	1	xvi						
	2							
	3							
Check filter / regulator container for water and drain if necessary	1	41						
	2							
	3							

Date	Notes
_____	_____
_____	_____
_____	_____
_____	_____
_____	_____
_____	_____

Weekly Checklist

Year _____

	⚠ WARNING
	Lockout/tagout before performing maintenance. **If power is required, make sure all non-maintenance personnel are clear of the restricted zone.**

Action	Page	Initials / Date					
Check staging conveyor drive chain tension	30						
Check staging conveyor drive chain lubrication	29						
Lubricate bearings (conveyors except staging)	26						
Check screws in terminals to make sure they are tight	—						

Date	Notes
_____	_____
_____	_____
_____	_____
_____	_____
_____	_____
_____	_____

Monthly Checklist

Year _____

	⚠ WARNING
	Lockout/tagout before performing maintenance. **If power is required, make sure all non-maintenance personnel are clear of the restricted zone.**

Action	Months (one shift)	Months (two shifts)	Page	Initials / Date			
Lubricate bearings (staging conveyor)	1	0.5	26				
Check gearbox oil level	1	0.5	27				
Vacuum electrical enclosures (do NOT use compressed air)	3	1.5	44				
Replace filter on filter / regulator	6	3	42				
Drain and refill oil in gearbox	24	24	27				
Clean sensors on staging conveyor	1	1	48				

Date	Notes
_____	_____
_____	_____
_____	_____
_____	_____
_____	_____
_____	_____

Drawing Set

Purpose of Appendix

This appendix consists of a list of schematics and other drawings to help you understand and troubleshoot your machine.

Drawings are inserted in the back of the manual or included in a separate binder, depending on the machine.

Description	Drawing Number
Mechanical	
Push conveyor assembly	89900-501
Pusher assembly	89920-501
Pivot arm assembly	89915-501
Sort conveyor assembly	89760-501
Pusher assembly	89756-501
Pivot arm assembly	89915-501
Staging conveyor assembly (LH)	89820-501
Staging conveyor assembly (RH)	89820-502
Belt drive assembly (LH)	89824-501
Belt drive assembly (RH)	89824-502
Roller with idler shaft	89841-501
Roller with drive shaft	89836-501
Double chain drive assembly	89863-501
Take-up sprocket assembly	89865-501
Transfer conveyor assembly (sample conveyor)	89940-501
HMI stand assembly	89891-501
Electrical	
Main electrical schematic	90636
Main electrical enclosure assembly	90636-502
Conveyor electrical schematic	90639
Conveyor electrical enclosure assembly (cables)	90639-501
Conveyor electrical enclosure assembly	90639-502
HMI stand assembly	90637-501
Pneumatic	
Filter / regulator assembly	89930-501
Cylinder assembly	89928-501
Valve assembly	89929-501

Document Evaluation

Purpose of Appendix This appendix provides a form so that you may evaluate this manual.

MiTek Machinery Division makes a continuous effort to provide customers with helpful, accurate documentation.

Please complete this form to provide us with comments or suggestions that improve the quality of our documentation.

Document Evaluation Form

Component Delivery System	Operation and Maintenance Manual	001060MANUAL rev. D

General Evaluation

	Poor	Fair	Good	Excellent
Content				
Organization				
Accuracy				
Clarity				
Completeness				
Illustrations				
Readability				

Specific Evaluation

Identify any inaccuracies in this manual. Please include page numbers.	
What are the best features of this manual?	
What are the worst features of this manual?	
Name:	Date:
Company:	Address:
Phone:	E-mail:
Return the form by mail: MiTek Machinery Division 301 Fountain Lakes Industrial Drive Saint Charles, MO 63301 Attn: Engineering Manager	Return this form by fax: 636-328-9218 Attn: Engineering Manager
If you do not receive a reply within 45 days, please call Machinery Division Customer Service and ask for the documentation specialist or engineering manager.	

Glossary

Purpose of Appendix This appendix provides definitions of terminology that apply to your *CDS*.

actuate	to activate, put into action
affected employee	an employee whose job requires him or her to operate or use a machine or equipment on which servicing or maintenance is being performed under lockout or tagout, or whose job requires him or her to work in an area in which such servicing or maintenance is being performed
amperage	the strength of an electric current, expressed in amperes
authorized employee	a person who locks out or tags out a machine or equipment in order to perform servicing or maintenance on that machine or equipment; an affected employee becomes an authorized employee when that employee's duties include performing servicing or maintenance covered under this section
connector plate	the nail-plate that is embedded into production material to hold it together
cushion	an attribute of a pneumatic cylinder that allows for adjustment of pressure at the end of a stroke
energized	connected to an energy source or containing residual or stored energy
energy isolating device	a mechanical device that physically prevents the transmission or release of energy, including but not limited to the following: manually operated electrical circuit breaker; a disconnect switch; a manually operated switch by which the conductors of a circuit can be disconnected from all ungrounded supply conductors, and in addition, no circuit can be operated independently; a line valve; a block; and any similar device used to block or isolate energy—push buttons, selector switches, and other control circuit type devices are not energy isolating devices
energy source	any source of electrical, mechanical, hydraulic, pneumatic, chemical, thermal, or other energy
HMI	(human-machine interface) a touch-screen PC or tablet that an operator uses to control the action of a machine
layout	a scaled diagram of the location of components and the space that they occupy
leveling screws	large cap head screws that thread into the table legs and allow the table height to be adjusted and leveled

light grid	the a device that uses multiple light beams to detect the presence of something solid
lockout device	a device that utilizes a positive means such as a lock, either key or combination type, to hold an energy isolating device in the safe position and prevent the energizing of a machine or equipment, including blank flanges and bolted slip blinds; should be standardized within the facility in at least one of the following criteria: color; shape; or size; and additionally, in the case of tagout devices, print and format shall be standardized
lockout/tagout	a means of isolating a piece of equipment from its energy source so maintenance can safely occur; guidelines provided in OSHA 29 CFR 1910.147
operator control interface	the method in which the operator controls the machine; it may be a touch screen, a control panel, etc.
pilot valve	a pneumatic valve that operates the setup valve to control the release or cessation of air in each setup; it is located on the bottom-chord end of one table in each setup
plate	see *connector plate*
PLC	(programmable logic controller) a solid-state control device that can be programmed to control process or machine operations.
port	a connection point for a peripheral device
potentiometer	a control knob that is a dial; allows a range of values to be set by turning the dial, commonly found on the PLC
proximity switch	a switch that uses an electromagnetic field to detect when an object is near, there is no physical contact between the object and the switch; inductive proximity switches detect only metal objects, capacitive proximity switches can sense both metallic and non-metallic objects
qualified person	a person or persons who, by possession of a recognized degree or certificate of professional training, or who, by extensive knowledge, training, or experience, has successfully demonstrated the ability to solve problems relating to the subject matter and work—ANSI B30.2-1983; one who has skills and knowledge related to the construction and operation of the electrical equipment and installations and has received safety training on the hazards involved—NEC2002 Handbook
receiver bar	the light bar that receives the signal from the transmitter bar; every light bar set consists of a receiver bar and a transmitter bar
regulator	a component of the pneumatic system that connects to the main air source and regulates the air pressure allowed into the system

setup valve	a component of the pneumatic system that control the flow of air to the rest of the setup
solenoid	an assembly used as a switch consisting of a coil and a metal core free to slide along the coil axis under the influence of the magnetic field
tagout device	a prominent warning device, such as a tag and a means of attachment, which can be securely fastened to an energy isolating device in accordance with an established procedure, to indicate that the energy isolating device and the equipment being controlled may not be operated until the tagout device is removed; should be standardized within the facility in at least one of the following criteria: color; shape; or size; and additionally, in the case of tagout devices, print and format shall be standardized
torque	a turning or twisting force
transmitter bar	the light bar that transmits the signal to the receiver bar; every light bar set consists of a receiver bar and a transmitter bar
VFD	(variable frequency drive) controls the speed of a cycle
voltage	Equal to the difference of electric potential between two point on a conducting wire carrying a constant current of one ampere when the power between the points is one watt

Index

Purpose of Appendix This appendix consists of an index to assist in navigating the manual.

A

adjusting system pressure *see* filter / regulator

B

bearings
- lubricating 26

belts
- adjusting 32, 33
- aligning 35
- push, sort, and transfer conveyor 39
- staging conveyor 32, 33, 35
- tensioning 32, 33, 39
- tracking 35

C

chains
- adjusting tension 30
- lubricating 29

checklists
- daily checklist 59
- maintenance 58
- monthly checklist 61
- weekly checklist 60

compressed air 24

contact information 3

controls *see* operator controls

conveyor
- gravity 7
- push 5
- staging 6
- transfer 5

corrections ii

customer service *see* Machinery Division Customer Service

cylinders
- flow control valves 43

D

declaration of safety conformity *see* safety

disconnect switch
- lockout/tagout xi
- switch 16
- switch locations xii

document evaluation 64

drawing set 1, 62

E

electrical requirements 10

electrical system
- light grid bars 46
- maintenance 44, 48
- PLC 45
- VFDs 44

e-mail support *see* Machinery Division Customer Service

emergency stop *see* E-stop

errors ii

E-stop 14
- disconnect switch 16
- pushbutton 15
- releasing 15
- stopping BLADE 15
- stopping CDS 15
- stopping Ranger 15
- testing function xvii

evaluation of document 64

F

faults *see* stoppages

filter / regulator
- adjusting pressure 42
- draining 41
- overview 41
- replacing filter 42

filter *see* filter / regulator

flooring requirements 10

flow control valves *see* pneumatic system

G

gearmotor
- changing direction 47
- lubrication 27

glossary
- icons 2
- terms 65

gravity conveyor 7

H

HMI (human-machine interface) 18

I

icon glossary *see* glossary

icons

navigation 2
safety xix
infrastructure requirements *see* specifications
interruptions *see* stoppages

L

labels 57
light grid bars 46
cleaning 47
location 5
lockout/tagout
electrical procedure xiii, xiv
pneumatic procedure xv
procedure xxxiii
lubrication
bearings 26
chains 29
gearmotor 27

M

Machinery Division Customer Service 3
maintenance
checklists 58
safety 22
manual
formatting cues 2
introduction 1
navigation 2
purpose 1
understanding 1
manual evaluation *see* document evaluation
marking restricted zone 11
mechanical system
maintenance 26
motor
changing direction 47

N

navigational aids 2

O

oil for gearmotor *see* lubrication
operating temperature 9
operation
stopping 14
operator controls 17

P

parts list 54
electrical 56
labels 57
mechanical 55
pneumatic 55
phone support *see* Machinery Division Customer Service
PLC
overview 45
pneumatic filter *see* filter / regulator
pneumatic requirements 10
pneumatic system
adjusting pressure 42
CFM 10
cylinders
flow control valves 43
draining discharge of filter / regulator 41
filter / regulator 41
maintenance 41
removing pressure xv
replacing filter 42
requirements 10
programmable logic controller *see* PLC
purpose of manual 1
push conveyor 5

R

relative humidity 9
replacement parts *see* parts list
restricted zone xviii, 11
return goods ii

S

safety
conformity xxvi, 4
general rules viii
indicators vii
labels 57
lockout/tagout xi, xiii, xv
marking restricted zone xviii
restricted zone xviii
safety test xxxvi
signal words vii
symbols xix
tests xvi
troubleshooting with energy xv
safety signs *see* safety symbols
safety test
inspecting xvi
testing E-stops xvii
spare parts *see* parts list
specifications
environmental 9
infrastructure 10
technical 8
staging conveyor 6
stickers *see* parts list
stop motion *see* E-stop
stoppages 20
support *see* Machinery Division Customer Service
switches

disconnect 16

T

tensioning belt *see* belts
tracking belt *see* belts
transfer conveyor 5

V

variable frequency drive *see* VFD
VFD
overview 44

W

weights *see* specifications